AD602863

62p

Interim Report

RESEARCH IN PREDICTIVE INSTRUMENTATION FOR MANUAL CONTROL

Prepared for
OFFICE OF NAVAL RESEARCH
WASHINGTON, D. C.

Contract No. NONR-4197(00)

[illegible] COMPANY
[illegible] CORPORATION
[illegible] NEW YORK

Best Available Copy

DDC
RECEIVED
JUL 23 1964
DDC-IRA A

3940

THIS DOCUMENT CONTAINED
BLANK PAGES THAT HAVE
BEEN DELETED

Sperry Report No. HR-9202-0027

December

Interim Report

RESEARCH IN PREDICTIVE INSTRUMENTATION FOR MANUAL CONTROL

Jointly Sponsored By

OFFICE OF NAVAL RESEARCH
LTCDR D. E. Rosenquist

BUREAU OF NAVAL WEAPONS
CAPT J. E. Perry

U.S. ARMY MATERIEL COMMAND
Mr. W. C. Robinson

Contract No. NONR-4197(00)

Prepared by
SPERRY GYROSCOPE COMPANY
DIVISION OF SPERRY RAND CORPORATION
GREAT NECK NEW YORK

3940

erry Report No. HB-9202-0027

47
Copy No.____

December 1963

SUMMARY

This interim report presents the Sperry efforts to date in its research program investigating predictive instrumentation techniques for manual control of aircraft, under Contract NONR-4197(00).

The work accomplished to date includes the following:

(1) A detail definition of the characteristics of the control systems to be studied, including the determination of the prediction parameters, the system characteristics, and the situation parameters which will be investigated.

(2) The design and fabrication of a complex of experimental equipment which will permit the research to be implemented. This consists of a control station for the pilot, a large CRT display medium, a flight director, and all the electronics to simulate the control systems, process input data from pilot and experimenter, and generate all of the display images.

(3) Performance criteria particularly suited to evaluating manual control capability for tasks with limited time constraints have been generated, and

(4) An experimental program which will permit the systematic inclusion of all of the variables which affect control performance has been established in detail.

The completion of this research will provide a sound basis for appropriately applying prediction concepts to specific aircraft maneuver tasks, incorporating prediction information in existing cockpit displays, and generating new displays to handle prediction data.

TABLE OF CONTENTS

Section		Page
I	INTRODUCTION	1-1
II	PREDICTION TECHNIQUES	2-1
	2-1. SIMPLE MANUAL CONTROL	2-1
	2-2. DIRECTOR CONTROL	2-1
	2-3. SIMPLE PREDICTION	2-2
	2-4. SIMPLE PREDICTION WITH DIRECTOR CONTROL	2-2
	2-5. FLIGHT PATH PREDICTION WITH DIRECTOR CONTROL	2-2
	2-6. FLIGHT PATH PREDICTION WITH PARAMETRIC DIRECTOR CONTROL	2-2
III	PARAMETERS TO BE INVESTIGATED	3-1
	3-1. PREDICTION PARAMETERS	3-1
	A. Number and Type of Predictions	3-1
	B. Prediction Period	3-2
	C. Prediction Repetition Rate	3-2
	3-2. SYSTEM CHARACTERISTICS	3-3
	3-3. SITUATION PARAMETERS	3-3
	A. Available Time	3-4
	B. Initial Error and Error Rate	3-4
	3-4. DISPLAY PARAMETERS	3-5
	A. Track Persistence	3-5
	B. Intensity and Contrast Levels	3-5
	C. Symbol Size and Shape	3-5
	D. Summary	3-6
IV	EXPERIMENTAL EQUIPMENT	4-1
	4-1. GENERAL	4-1
	4-2. DESCRIPTION OF CIRCUITS	4-3
	A. Analog Computer	4-3
	B. Control Panel	4-4
	C. Switches and Pattern Generator	4-5
	D. Image Programmer	4-7

TABLE OF CONTENTS (Cont)

Section		Page
	4-3. CONSTRUCTION FEATURES	4-8
V	PERFORMANCE CRITERIA	5-1
	5-1. ACCURACY	5-1
	5-2. MANEUVER TIME	5-2
	5-3. STICK MOTION	5-3
	5-4. GENERAL CONSIDERATIONS	5-3
VI	EXPERIMENTAL PROGRAM	6-1
	6-1. SYSTEMS AND RELATED PARAMETERS	6-1
	A. Non-Prediction Systems	6-1
	B. Simple Prediction Systems	6-1
	C. Flight Path Prediction Systems	6-2
	6-2. SUBJECTS	6-4
	6-3. EXPERIMENTAL PROCEDURES	6-4
	6-4. PERFORMANCE MEASURES	6-4
	A. Maneuver Success	6-4
	B. Maneuver Time	6-4
	C. Integrated Stick Displacement	6-5
	D. Stick Reversals	6-5
	E. Trajectory Data	6-5
	F. Opinions of Test Subjects	6-5
VII	BIBLIOGRAPHY	7-1
Appendix		
A	Transient Response of Second Order System Subject to Initial Error Rate	A-1

LIST OF ILLUSTRATIONS*

Figure	
1	Simple Manual Control Display
2	Display For Director Control
3	Display For Simple Prediction
4	Display For Simple Prediction With Director Control
5	Display For Flight Path Prediction With Director Control
6	Display For Flight Path Prediction With Parametric Director Control
7	Definition of Prediction Parameters
8	Definition of Problem Parameters
9	Transient Response of Second Order System Subject to Initial Position Error
10	Transient Response of Second Order System Subject to Initial Error Rate
11	Overall View of Predictive Instrumentation Complex
12	Predictive Instrumentation Subject's Station
13	System Block Diagram
14	REAC 400 Computer
15	Image Programming - Functional Drawing
16	Predictive Instrumentation Display
17	Computer System Block Diagram - Quadruple Trace
18	Computer System Block Diagram - Flight Path Trace
19	Connections and Modifications to Integrators - Schematic Diagram
20	Computer Timing Circuits - Schematic Diagram
21	Control Panel Schematic
22	Control Panel Arrangement
23	Switches - Schematic Diagram
24	3.2 KC Oscillator and Pattern Generator - Schematic Diagram
25	Timing Pulses Generation - Schematic Diagram

- - - - - - -

*All illustrations are at the end of the report.

LIST OF ILLUSTRATIONS (Cont)

Figure	
26	AND and OR Gates - Schematic Diagram
27	Predictive Instrumentation Operator's Station
28	Predictive Instrumentation Control Units
29	Connector and Cabling Wiring

SECTION I

INTRODUCTION

This report was prepared by Sperry Gyroscope Company Division of Sperry Rand Corporation, Great Neck, New York, under Contract No. NONR-4197(00).

Predictive instrumentation involves the presentation of information to the vehicle operator regarding the future state of the vehicle as the result of contingent control inputs. As presently conceived, this is accomplished by presenting extrapolated paths based on the present position of the vehicle, the contingent control input, and the dynamic characteristics of the control system.

Information pertaining to the result of a particular control input before that input is made, can be of significant value to the operator, particularly in time-constrained situations. In time-constrained, error-nulling situations, where the vehicle must be correctly positioned within a given time, it is not always sufficient to present "quickened" flight director command information (reference 1). While this information tells the pilot which control input is correct, it gives no information regarding the time required to arrive at the desired end state. The maneuver may be correct, but it may take too long. Therefore, information involving both maneuver appropriateness and maneuver time in relation to available time would have utility in such situations. This is what predictive instrumentation accomplishes. It puts the projected result of a control input into the context of available time, and in effect, tells the pilot what his future position will be, and when this will occur.

Prediction information can be used with or without flight director instrumentation. Used together, prediction places the command information in a time context so that the pilot is told what to do (flight director)

and how long the complete maneuver will take (prediction). Predictive information itself gives the pilot future maneuver data in position and time for specific control inputs, but it does not give him control command information.

SECTION II

PREDICTION TECHNIQUES

The prediction techniques being investigated in this program are of two types. Those based on fixed stick inputs are termed simple prediction systems, while those based on quickened or director programs to control stick inputs are called flight path prediction systems. The effectiveness of these systems must be compared to performance levels achieved with manual control systems and with director control systems. A descriptive summary of all systems being investigated is presented in the following paragraphs.

2-1. SIMPLE MANUAL CONTROL

The human pilot is presented with displacement information only, as in figure 1. He can obtain rate information visually by observing the rate of change of displacement, through the motion of the vehicle with respect to the desired course. Acceleration feedback may also be obtained to some extent from any curvature that the path of the vehicle may exhibit. The operator controls stick position to return the vehicle to the on-course, and to maintain this flight path, before the vehicle reaches the gate at the end of its run. The vehicle has a constant speed in the longitudinal deviation, which defines the time available for the control task.

2-2. DIRECTOR CONTROL

A flight director computer combines displacement, rate, and higher derivative information to provide a single command signal which the pilot can easily satisfy continuously with appropriate control inputs. The flight director display may be in either pursuit or compensatory form, and it is presented as the indicator with the single element in figure 2. The vehicle will return to the desired course in a stable manner; the exact

path will depend on the initial conditions, the dynamic characteristics of the vehicle, and the sensitivities selected for inputs to the flight director. The position of the vehicle with respect to the on-course is also displayed for purposes of situation assessment (monitoring).

2-3. SIMPLE PREDICTION

The position of the vehicle in relation to the on-course is displayed as in the case of simple manual control. In addition, one or more predicted flight paths are also presented, as indicated in figure 3. These represent the path of the vehicle if the control were immediately returned to neutral, or maintained in its present position, and the paths if the control were similarly placed in either the left or right extreme or hard-over positions. The pilot decides when and how to manipulate the control on the basis of the present position of the vehicle and the predicted flight paths.

2-4. SIMPLE PREDICTION WITH DIRECTOR CONTROL

This control scheme is a composite of Simple Prediction and Director Control, and its display is presented in figure 4. The prediction information is used to reduce large displacements in relatively short time periods, while the director provides stable coupling to the on-course.

2-5. FLIGHT PATH PREDICTION WITH DIRECTOR CONTROL

The predicted flight path of the vehicle if the pilot were to continuously satisfy all director commands is presented in the display in figure 5. The pilot has an immediate indication whether the flight director program is adequate to reduce the displacement, and its rate to acceptably low values in the time or range remaining for the maneuver.

2-6. FLIGHT PATH PREDICTION WITH PARAMETRIC DIRECTOR CONTROL

This system is identical to the preceding Flight Path Prediction System, with the exception of one key addition. The pilot can modify the flight director control program if the prediction information indicates that the program is inadequate to reduce the displacement and/or rate error in the time remaining. Thus, in figure 6, the pilot reduces the response time of the system by altering the flight director program until prediction for the modified program indicates that it is satisfactory, e.g., the dotted flight path.

SECTION III

PARAMETERS TO BE INVESTIGATED

The factors which affect performance levels achieved in manual control tasks may be classified in three categories: prediction parameters, system characteristics, and situation parameters.

3-1. PREDICTION PARAMETERS

Three aspects of prediction are important: what is predicted, how far ahead in time is it predicted, and how often is it repeated on the display?

A. NUMBER AND TYPE OF PREDICTIONS

The quality of information presented by means of the display is affected by the nature of the prediction. That is, how useful is the predictive information given to the operator? For simple prediction techniques the nature of the information is a prediction of the future path of the vehicle based on a contingent control stick position. It is possible to predict, on the basis of any stick position, the vehicle motion which would result from the control being in that position. For simple prediction, useful displays to an operator consist of information relating to what would happen if the stick were in the hard-over positions, and/or the center (zero acceleration) position, and/or the present stick position. Extreme positions tell the operator the limits of control capability, null position tells him the effect of no more control inputs, and the present position tells him the effect of no control change.

For director control, the control inputs are constrained by the director program from which the track of the vehilce may be predicted and displayed.

B. PREDICTION PERIOD

Regardless of what is predicted, the period of time for which it is predicted has informational importance. Some considerations are involved in this parameter to determine suitable limits. The utility of prediction is based on the operator being able to act on this information. For example, if a system cannot respond in less than 2 seconds, it does no good to predict for only one second ahead, since the operator is unable to take any effective action. Conversely, a prediction beyond the available maneuver time has no practical value for the operator, since he is not concerned with what happens after the available time has elapsed. The limits of this parameter are defined than by the system's response time at the lower end, and by the available time at the upper end. It is logical that the prediction period should be a function of available time rather than a prescribed number of seconds. That is, the operator may want to see 3 seconds prediction for a 10-second problem, but 9 seconds for a 30-second problem. In both cases he is seeing ahead 30 percent of the time before the final gate is reached. It is improtant to determine system performance as a function of predicting different proportions of available time.

C. PREDICTION REPETITION RATE

A third important considereation in displaying predicted information is the repetition rate at which it is displayed. Here again, available time is critical in determining the utility of repeated information. For long-term problems the operator is not interested in very rapid repetitions of essentially the same information, but would probably be able to profit by a slower repetition rate.

The latter are critical in determining the value of prediction period and [illegible] in that they provide adequate information to allow for timely corrective control inputs. In this regard, relationship between period length and repetition rate exists. For example, in short-term problems the operator wants his prediction updated most frequently and wants to look a relatively short time ahead. In long-term problems where short-time changes are not critical, he would be adequately served by a longer prediction period which is updated less frequently. Thus, the prediction period and repetition rate parameters are interdependent, both being based on available time. Their influence on the display is indicated in figure 7.

3-2. SYSTEM CHARACTERISTICS

System performance is mediated by the dynamic characteristics of the system, which determine how the system responds to the control input. The nature of these dynamics vary with the mathematical order of the system, as indicated in table 1.

TABLE 1

SYSTEM CHARACTERISTICS

Order of System	Dynamic Parameters	Control Input
First	τ	Velocity $\dot{y}$
Second	ζ, ω_n	Acceleration $\ddot{y}$
Third	ξ, ζ, ω_n	Rate of Acceleration $\dddot{y}$

Table 1 pertains to a system in which position is the controlled variable, but its form has general application.

For a first-order system the relevant parameter is a time-constant, τ. While the first-order system cannot overshoot, it is affected by the parameter τ in terms of the time before the desired output is reached. For second-order systems the parameters are damping ζ, which determines the shape of the response track, and natural frequency, ω_n, which determines the extension of the track in real time.

These dynamics determine the system's transient response characteristics and, for a director-type predictive system, are used to trace the predicted path. By this technique it becomes possible for the operator to be shown the path the system takes when the control input is as directed, and whether the maneuver will be completed in time.

Since the transient response characteristics determine system performance and these characteristics are determined by the system dynamics, their importance is evident. In the non-directed system, the operator, in effect, is the one who determines these response characteristics by modifying control inputs to modulate the system dynamics.

3-3. SITUATION PARAMETERS

The situation parameters define in detail the problem with which the operator is confronted in the control task, as indicated in figure 8.

A. AVAILABLE TIME

As an example, consider the problem confronting the operator whose control task is to position the vehicle correctly with respect to an "on-course" line within a given time limit. This time limit is determined by the forward velocity of the vehicle and the distance to the end gate. As the available time decreases, the demands on the operator to make a correction more quickly and/or more drastically increase. Consequently, available time is critical in determining the requirements of the system, and its performance can be evaluated as a function of this parameter. Indeed, success or failure of a maneuver is determined in terms of available time; for correction is or is not possible depending on how much time remains in which to make the correction. Even when enough time is available, it behooves the operator to make the correction as quickly as possible in order to unburden himself toward the end of the problem (that is, to allow as much margin for safety as possible). In this sense, the operator is practically constrained to null the system's error state as quickly as possible with available time as a limiting factor.

B. INITIAL ERROR AND ERROR RATE

The need for corrective control inputs in any problem situation is contingent upon the existence of an error state. An error state results from a positional error, for example, a displacement of the vehicle from the course line, or from a track heading error which produces an error rate, or a combination of position and track heading errors.

As the error condition of the system varies so does the requirement for the system to correct it. With a given available time the greater the error condition, the greater the demand on the system.

There is a relationship between available time and error condition which determines the adequacy of a system. A combination of these two factors can be such that the system is incapable of successful maneuver, if there is not enough time to null out the existing error. For a given system then, an envelope of feasibility can be determined on the basis of error conditions, system characteristics, and available time.

The nature of the transient response of a second order system subject to an initial error and an initial error rate is presented in figures 9 and 10. The effect of the parameters ζ and ω_n on the response is indicated in these figures. The data on which the response to an initial position error (figure 9) is based, is standard in the literature, as for

example, reference 2. However, the response to an initial error rate is not available, and was developed on this program as presented in Appendix A. The combination of data for error and error rate enables one to determine the response of the linear system subject to any combined initial error and error rate by superposition.

3-4. DISPLAY PARAMETERS

There are a number of display parameters which mediate the quality of predictive information presented to the operator. These include trace persistence, intensity and contract levels, and symbol size and shape.

A. TRACK PERSISTENCE

In a CRT presentation, predictive information is presented in the form of successive traces spaced a relatively short time apart, which may overlap. The persistence of the trace must be considered in terms of possible confusion due to superimposition. If persistence time is too long, the effect of successive presentations may be a confusion of lines so that it is difficult to tell them apart. If persistence time is too short, on the other hand, information may be lost. The prediction is generated by a fast time extrapolation of present position and takes a finite time to trace out in its entirety. If persistence is too short, the beginning of the trace can disappear before the end is generated. The phenomenal result would not be a complete line trace. As a result, variable intermediate information may be lost.

B. INTENSITY AND CONTRAST LEVELS

Information is of no value if it cannot be seen clearly by the operator. In order to maximize clarity of information it is important to consider contrast and intensity levels, particularly where these parameters are used to distinguish one piece of information from another, e.g., present stick position prediction distinguished from center stick position by different intensity levels.

C. SYMBOL SIZE AND SHAPE

The size and shape of the symbology representing the present or the terminal position of the vehicle can affect the information aspects of the display.

D. SUMMARY

These display characteristics, although parametric in nature, are presently not being considered as experimental variables. Instead, particular values of each have been selected from a range available with the experimental equipment. These are assumed to be adequate for the presentation of information.

SECTION IV

EXPERIMENTAL EQUIPMENT

A view of the arrangement of experimental equipment which has been designed and fabricated for this research program is shown in figure 11. This complex does not include the analog computer and the data recorders. A close-up of a test subject in his seat with the primary CRT display, the flight director below the CRT, and the control stick is shown in figure 12.

A detail description of all of the components in the complex, and their relationships is presented in this section.

4-1. GENERAL

A simplified breakdown of the system is presented in the system block diagram, figure 13. The major subdivisions are indicated, together with the interconnections, and inputs and outputs. The system consists of

- Analog Computer, Reeves Model 400C
- Control Panel
- Switches and Pattern Generator Unit
- Image Programmer
- Oscilloscope (CRT Display).

The Analog Computer (figure 14) receives input signal information from the control stick and processes it to derive the required voltages to generate all traces.

The Control Panel contains the indicator lights, switches, and controls to allow selection of mode of operation and adjustment of problem time, initial delay of stick control, initial error, initial error rate, computer coefficients, and electrical stick stiffness. In addition, the

the Control Panel has the problem start push-button with indicator light indications for computer ready, recorders ready and problem on. At the end of the problem, the equipment resets automatically.

The Switches and Pattern Generator Unit contains the gates that control the flow of analog data to the oscilloscope. Actuating pulses for the gates are received from the Image Programmer and convert the computer information from parallel to serial form, as required by the oscilloscope. The Switches and Pattern Generator Unit offers controls for adjusting the display time for the fast traces, the dead time between traces, and percentage of the fast traces to be blanked. In addition, there are controls for adjusting sizes of real-time and fast-time vehicle identification images, either crosses, circles, or both.

The Image Programmer generates the pulses required to fire the switches and effects a multiplexing program of the computer analog outputs to make them compatible with the oscilloscope. As indicated in figure 15, image programming functional drawing, the 400-cps voltage supply is used as the time reference and input, and is shown going into a frequency doubler The output is an exact double multiple of the 400-cps source and goes to two blocks. One block is a one-shot multivibrator (140 microsecond pulse) and via the blanking circuits (subsequent block) blanks the retrace lines on the oscilloscope. The output of the frequency doubler also goes to four flip-flops in cascade where the 800 pulses per second (double 400) are successively reduced by factors of two down to 50 pulses per second. The last of these is used as the frame repetition rate of the system. Emitter followers are used in conjunction with the flip-flops to increase the fan-out capabilities; that is, allow driving many more loads. Ultimately, the X and Y switches are fired by way of the AND gates, OR gates, pulse amplifiers, and switch drivers. Respective functions of the switches are indicated to the right of each X and Y pair. In total, sixteen pairs are shown; this arises from the four flip-flops which have 24 or 16 discrete states. Sixteen switches are provided on the Image Programmer to allow switching in or out any of the data on the 16-switch pairs. Actually, the gating of information is not altered; rather, the images on the scope are blanked or unblanked by their respective switches in the group of 16.

In addition, the Image Programmer has the power-on switch, whereby inputs of +25 vdc, -25 vdc, -80 vdc and 115 vac, 400 cps can simultaneously be applied to the entire system. A fuse and an indicator light are included for each voltage.

The Oscilloscope (figure 16) is a Model 2130-S manufactured by Electromec, Inc. Los Angeles, Cal. It features a 21-inch screen with P-7 phosphor. This is a double phosphor giving two colors, blue and yellow-green; persistences to 10 percent point are 0.0003 and 0.4 second, respectively. The oscilloscope is operated on its side to position the long axis vertically. The face has been modified so that an edge-illuminated scribed reticule is superimposed on the CRT. Provisions are included so that several plexiglass filters may be inserted between reticule and oscilloscope face. The filters, from Rohm and Haas, are:

- Cat. No. 2064, Light Smoky
- Cat. No. 2074, Heavy Smoky
- Cat. No. 2208, Yellow

Two of each are on hand and combinations may be employed to effect control of the apparent persistence of the CRT.

4-2. DESCRIPTION OF CIRCUITS

A. ANALOG COMPUTER

The basic blocks within the Reeves Model 400C computer are the conventional high gain feedback amplifiers that are utilized as summers and integrators. The other elements within the computer such as servos, limiters, and diode function generators are not used. Two auxiliary six-channel recorders are available and are employed to produce permanent traces of various voltages. Patching of the recorders is simple, and the total of twelve channels gives wide capability for recording the simultaneous behavior of many signals.

Two patch panels have been wired up as indicated in

- Figure 17, Computer System Block, Quadruple Trace
- Figure 18, Computer System Block, Flight Path Trace.

Without further changes, each of these patches produces its own mode of operation.

A few added features were required in the computer to make possible the fast traces. The standard integrators with the one microfarad feedback capacitor have been modified so that 0.2, 0.1, 0.05 or 0.025 microfarad capacitors may be substituted. These correspond to fast-time factors of 5, 10, 20 or 40, equal to the reciprocal of feedback capacitor in

microfarads. A four-position multiple deck selector switch, on the front panel of the computer, allows switching to the desired fast-time factor. In all, 9 of the 20 integrators have been modified. Details of the components and interconnections are indicated in figure 19.

The computer modifications also include isolating the reset and hold relay busses of the modified integrators from the unmodified units. These busses, for the fast-elements, are energized from circuitry in the Switch and Pattern Generator Unit. The relay busses are pulsed at a rate from approximately twice a second to approximately once every five seconds. The rate is continuously variable by controls on the front panel of the unit.

One of the controls adjusts the length of the fast-time trace display. The other controls the time in which the computer remains in reset, the dead time.

A switch is included on the front panel of the computer so that the reset and hold relay busses may either be connected for normal operation or the modified integrators may be isolated. Details are shown in figure 20. The reset rates selected set acceptable limits on the frequency of actuations of the relays. As an example, two reset cycles per second amount to one-million relay actuations in approximately 130 hours; this has been chosen as a limit for failure-free operation.

B. CONTROL PANEL

The Control Panel contains the circuitry shown in figure 21. Manually adjustable potentiometers are included as controls on inputs to the system. Excluding the two-ganged acceleration limit potentiometers, they are all 10-turn precision types with digital knobs so that resetability is good to one part in a thousand. The functions the potentiometers control are as indicated on the schematic and are self-explanatory. Physical positionings are as indicated in figure 22.

In addition, the Control Panel has two 4-pole, double-throw relays. One is the start relay which electrically latches itself in when the start button is pushed, and drops out automatically when the problem is over. This feature has been included to keep use of the analog computer to a minimum. The other relay is the control delay relay, which is energized when the control stick pick-off arm is to be connected to the system. At the start of a problem, a short period of time elapses during which the

control stick has no effect; i.e., the control delay relay is de-energized. The length of this period is controllable by the control delay potentiometer, shown with its associated circuitry in figure 21. At the end of the period, the control delay relay is energized and the stick acquires control. The purpose of the delay is to allow the subject to familiarize himself with the given initial conditions before he can exercise control. The control delay circuitry consists of a monostable flip-flop, with the reset time being controlled by varying the time constant of the control delay potentiometer (1 megohm) and the 22-microfarad capacitor. The contacts of both relays are interconnected with the system as shown on the schematic (figure 21).

C. SWITCHES AND PATTERN GENERATOR

The circuits in the Switches and Pattern Generator are as shown in the following figures:

- Switches, figure 23
- 3.2 KC Oscillator and Pattern Generator, figure 24
- Computer Timing Circuits, figure 20.

The potentiometers indicated are all placed on the front panel of the unit. Their functions were described previously in this section.

1. Switches

The switches supply input X and Y information to the oscilloscope in serial form, to time share the writing beam. All solid state circuitry is used with solid state switches of the type 2N1640 by Crystalonics, Inc. This is a PNP symmetrical silicon transistor with very low leakage currents, less than 12 ohms. This device is used to clamp the midpoint of parallel summing resistors to ground. Summing resistors that parallel sum positive or negative voltages at inputs to the oscilloscope. By actuating these switches in the desired sequence, the analog positioning or Lissajous pattern voltages may be summed through, or shunted to ground. The midpoints of the summing resistors are chosen so that neither sum point nor signal sources are ever clamped to ground.

2. 3.2 KC Oscillator and Pattern Generator

The 3.2-kc oscillator generates the voltages to be used for the Lissajous cross or circle identifying the real- or fast-time vehicle position. These voltages are parallel summed with the appropriate X-Y

positioning d-c voltages to produce dynamic signals consisting of a 3.2-kc Lissajous voltage riding on a d-c component for X axis and for Y axis.

The 3.2-kc frequency is used to assure more than one complete sinusoid per display interval. The display interval is defined as the period of time that each image is flashed on the oscilloscope per frame. Insofar as there are 50 frames per second, each frame takes 20 milliseconds. Dividing this into 16 parts by the 4 flip-flops in the Image Programmer, each lasts 1.25 milliseconds. Subtracting 0.140 millisecond for retrace line blanking, the display interval then becomes 1.11 milliseconds. Since the time for one 3.2-kc sinusoid is 0.313 millisecond, the oscillator frequency and display interval are compatible.

The selection of 3.2-kc, an integral multiple of the basic 400 cps, eliminates "rolling" of patterns and beat frequencies that may be set up by the power source. If successive frames do not paint the same patterns with same positions of sine waves, the irregularities that exist are seen running through the images.

The oscillator is essentially a tuned resonant tank which receives voltage pulses from a 40-microsecond, one-shot multivibrator. By passing the output through several filter sections, a clean sinusoidal signal is derived with the amplitude remaining fixed within prescribed limits. This output then goes to the six potentiometers and associated resistors and capacitors that make up the Pattern Generator. In-phase, out-of-phase, and 90-degree phased voltages are produced and are used to generate the Lissajous patterns for the real- and fast-time vehicle images, crosses or circles.

3. Computer Timing Circuits

The schematic diagram for the computer timing circuits (figure 20) shows the technique employed for periodic resetting of the fast-time integrators in the computer. A power transistor (2N389 or equivalent) produces high current pulses in the X and Y relay busses to the fast-time elements. The pulse width and repetition rate are produced by the fast-time repetition rate generator. This generator is a free running multivibrator where on and off times differ and are controllable via a potentiometer. Thus, two potentiometers are included, one to control the length of the fast-time display interval, and the other to control the dead time interval during which the computer is reset.

The remainder of the circuitry is used to blank part of fast-time traces. The ramp voltage across the 22-microfarad capacitor near the dead time adjust is used as a time base. It is scaled down by a 2 K potentiometer, called fast time trace length adjust, and then applied to a Schmitt trigger squarer. By adjusting the 2 K pot, the point where the Schmitt trigger fires is continuously controllable, relative to the fast-time traces. Thus, a variable blanking pulse is available at the output of the Schmitt trigger. This signal, in turn, goes through an AND gate and then an OR gate to the blanking circuits in the Image Programmer. The purpose of the AND gate is to make certain that the fast-time trace blanking is effectual only during the intervals when the fast-time traces are being generated. The OR gate combines the output with all the inputs to the total blanking circuits in the Image Programmer.

D. IMAGE PROGRAMMER

The contents of the Image Programmer are shown in two schematics:

- Timing Pulses Generation, figure 25
- AND and OR Gates, figure 26.

The functional drawing in figure 15 indicates the major subdivisions of the Image Programmer and the flow of signals.

The basic design establishes a time reference locked to the 400-cycle power source frequency, and effects a multiplexing program to fire the switches in their correct timing sequence.

1. Timing Pulses Generation

The time reference pulses are generated as indicated in figure 25. The flow starts at the frequency doubler, where 400 cps is converted to 800 pulses per second. These are squared by a Schmitt trigger with an output that drives both the 3.2-kc oscillator and a bank of 4 flip-flops in cascade. In the flip-flops, the pulses are successively divided by two to produce 400, 200, 100 and 50 pulses per second. The last of these pulses controls the frame rate. The flip-flops are triggered by trailing edge fall-time of one microsecond or less, and the two outputs per flip-flop drive eight emitter followers for greater fan-out capability; i.e., to allow driving greater loads. The loads to the emitter followers are the AND gates shown in matrix form in figure 26. The signals are identified as A, $\overline{A}$, B, $\overline{B}$, C, $\overline{C}$, D and $\overline{D}$.

Figure 25 also contains the total blanking circuits that drive the Z axis of the oscilloscope. These include a one-shot multivibrator that produces 0.140-millisecond pulses to occlude the retrace lines on the scope. All other inputs to the total blanking circuits are combined via an OR gate, so that any time interval may be blanked by supplying approximately +10 volts into any input to the OR gate. The threshold is at approximately +5 volts. The output of the total blanking is a train of pulses that are at either of two levels, -5 volts or -80 volts. These produce unblanking or blanking respectively. The last stage is an emitter follower to give a low output impedance and sufficient drive to the scope.

2. AND and OR Gates

The AND gates accept the light outputs from the flip-flops through their associated emitter followers, identified as A, $\overline{A}$, B, $\overline{B}$, C, $\overline{C}$, D and $\overline{D}$, and produce 16 outputs in parallel form. The 16 output signals are on individual wires and are inputs to the OR gates. At any time, only one of these lines is energized with approximately +10 volts. This on condition is switched from one wire to the next until all 16 are traversed, and then the process is recycled. The period of time that each of the wires remains energized corresponds to that display interval, including the blanking of 0.140 millisecond.

The outputs from the AND gates are directed to a 16 x 16 open OR matrix, referred to as the OR gates. By appropriate placement of interconnecting diodes, the outputs are programmed to yield the images and patterns desired.

The arrangement is particularly suitable from the standpoints of versatility and flexibility. Changes in displayed images can be made readily by simply altering the open array of diodes. Thus, greater latitude in reprogramming and ease of maintenance are both afforded.

The outputs of the OR gates actuate the switches in figure 23 in the appropriate time sequence, as determined by the matrixing.

4-3 CONSTRUCTION FEATURES

The circuitry construction is of the open type, which offers several distinct advantages:

- standard components may be used to minimize total cost

- greater ease in maintainability and repair is derived to reduce down time
- larger components with higher ratings may be used to give a higher reliability
- hot spots which accelerate breakdowns and make the circuit designs more difficult are eliminated.

The system, exclusive of relays in the computer and control panel, does not have moving parts. It features all solid state devices in lieu of vacuum tubes for the circuits especially developed for this equipment.

Figures 27 and 28 show the packaging employed. The new circuits are contained within standard chassis enclosures with standard covers to provide dust proofing and protection. All components are accessible when covers are removed. A cabling diagram for the system is shown in figure 29.

Control switches, knobs, and indicator lights incorporated on each assembly offer wide ranges in controlling inputs, outputs, and functions.

In summary, the equipment has been designed to the research requirements to:

- keep engineering and fabrication costs to a minimum
- provide for maximum trouble-free operation
- afford widest control of the variables
- make certain that engineering design places no limitation on the research goals.

SECTION V

PERFORMANCE CRITERIA

Analysis of performance is aimed at determining levels of capability for each prediction technique as a function of different parametric conditions. What this amounts to is the examination of maneuver proficiency in terms of accuracy, time to completion, and ease of effort.

5-1. ACCURACY

Regardless of the speed and facility of a maneuver, its quality rests on whether or not it is successful, since its sole purpose is to accomplish a desired end state.

Maneuver success can be defined operationally in terms of acceptable limits of error (ϵ_f) and error rate ($\dot{\epsilon}_f$) at the end gate. Based on these limits, a success envelope can be developed against which to compare the system performance. The limiting conditions for this envelope are that the final error be within gate limits, and that final error rate be low enough to permit the vehicle to continue within the gate confines. As a consequence of these limiting conditions, when ϵ_f is at a maximum and positive, $\dot{\epsilon}_f$ must be negative. Conversely, when ϵ_f is maximum and negative, $\dot{\epsilon}_f$ must be positive. These relationships are shown on the next page. The following equations define the upper and lower boundaries of the success envelope:

$$\dot{\epsilon}_f = \frac{\left[\frac{W}{2} - \epsilon_f\right]}{L} \cdot t$$

$$-\dot{\epsilon}_f = \frac{\left[\frac{W}{2} + \epsilon_f\right]}{L} \cdot t$$

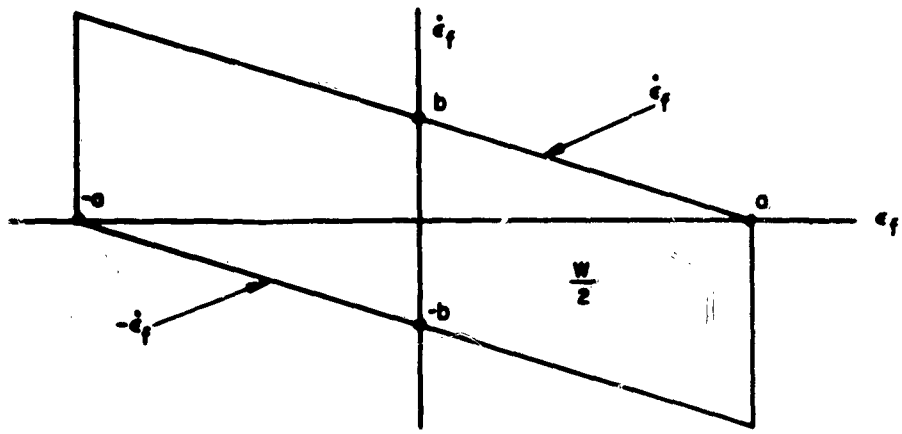

where w is the gate width, L is the total specified length of travel of the vehicle beyond the gate, and $\dot{x}$ is the longitudinal speed of the vehicle.

The frequency distribution of error and error rate at the gate is another quantitative criterion for accuracy which may augment the principal maneuver success measure.

5-2. MANEUVER TIME

The time it takes to complete the maneuver is an indication of system capability. It takes on critical importance in time-constrained situations, where the operator is concerned with completing the maneuver as quickly as possible.

In addition, maneuver time as a proportion of total available time is a measure of the temporal margin of safety made possible by the particular system. In the context of a time-constrained situation, it is desirable for the operator to unburden himself from actual stick controlling as quickly as possible so he is able to monitor for last minute corrections or, attend to other tasks involved in the situation.

As a performance criterion, maneuver time is conceptually independent of accuracy considerations if it is considered as the time elapsing between the start of the problem and the cessation of control stick movements. In other words, it would be possible for an operator to complete a maneuver quickly and for the maneuver not to be successful. If maneuver time is made contingent on maneuver success, on the other hand, only successful trials can be considered when maneuver time

is measured. Since maneuver success is presumed to be an overriding criterion, maneuver time will be recorded only for successful trials.

Maneuver time will be recorded as the time elapsing between the start of the problem and the cessation of control stick movements for successful maneuvers.

5-3. STICK MOTION

A third aspect of performance in addition to accuracy and time is ease of efforts, the "cost to the organism". The merits of a system can be meaningfully measured in terms of how much effort the operator must expend to make the system work effectively. In the problem situation, measurable effort consists in moving the stick to impart control inputs. The measure taken here to indicate effort is the magnitude of stick displacement integrated over problem time.

An additional measure of the ease with which the system can be successfully maneuvered is the number of control stick reversals required during the problem. The nature of the control, since it involves the addition and elimination of lateral acceleration, requires some control stick reversal in order to null out lateral velocity. Systems can be differentially compared, however, on the basis of the total number of control reversals needed to effect a given maneuver. This measure of performance must, however, be considered in relation to maneuver time. In an error nulling task, a slight lateral acceleration will allow the system to approach the desired path slowly enough so that it can coast in with a minimum of control reversal, but not in time to meet deadline. Some more drastic lateral acceleration is necessary to bring the vehicle close to the correct path in a short time, at the expense of overshoot with stick reversal.

5-4. GENERAL CONSIDERATIONS

In a time-constrained, error-nulling situation, late errors are more consequential than early errors because of the relative lack of time to correct them. It may seem reasonable that performance measures, particularly error, should be weighted by some function of time. This would have the effect of penalizing later errors, which is appropriate in the time restricted problem. While this is not done explicitly in the performance measures indicated, it is implicit in both the accuracy and time measures.

The system is being operated to meet a time-deadline, and errors made or left uncorrected late in the situation impose a more severe requirement on the system for successful maneuver within the time limit. Late errors also increase the total maneuver time.

SECTION VI

EXPERIMENTAL PROGRAM

The experimental program consists of an evaluation of manual control performance achieved through the use of prediction and non-prediction systems, in the context of the relevant prediction, system, and situation parameters. The evaluation involves measurement of performance with each system in a variety of time-constrained problem situations.

6-1. SYSTEMS AND RELEVANT PARAMETERS

The six systems to be evaluated fall into three pairs with respect to prediction capability.

A. NON-PREDICTION SYSTEMS

For these systems, the only information explicitly presented to the pilot subject is the position of the vehicle as it moves in real time, and positional error with respect to the desired position. One system is unquickened while the other has director control.

Performance levels with these two systems constitute a base line against which to evaluate the utility of the prediction techniques under consideration.

The parameters which are relevant here are available time, initial error and initial error rate, and system dynamics.

B. SIMPLE PREDICTION SYSTEMS

For this pair of systems, the explicit information presented is the vehicle position with respect to the desired position and the predicted path(s) of the vehicle for a specified time in the future, contingent on one or more control stick positions.

This pair of systems will be evaluated for performance with different values of available time, initial error, initial error rate, number and type of prediction trace, prediction period, prediction repetition rate, and system dynamics.

C. FLIGHT-PATH PREDICTION SYSTEMS

This type of system involves a predicted path contingent on controlling the vehicle in accordance with the flight director commands. That is, it predicts the path of the vehicle as it would occur if the director were nulled. With the parametric director system, the pilot subject is able to modify the director program to produce a more suitable path for the vehicle. Performance with this pair is examined in the light of the following parameters: available time, initial error, initial error rate, prediction repetition rate, and system dynamics. The prediction period is made long enough to cover the complete problem time available.

Table 2 presents a summary of the systems to be studied, and then the relevant parameters to be investigated.

The nature of a system transient response to an error or error rate-nulling control input is determined by the dynamics of the system plus the magnitude of the error condition. The time it takes to null the error as a function of these parameters constitutes system response time. The variation of system dynamics and initial error conditions can be made, then, in terms of the response time. Response time as a proportion of available time is an important measure of the inherent capability of the system.

This concept permits a more convenient way of varying many parameters simultaneously in a manner that reduces the number of discrete experimental trials necessary to explore system performance comprehensively. For example, to vary seven parameters simultaneously, with a minimum number of three values for each parameter to produce functional data would result in 3^7 or more then 2000 discrete trials per subject without replication. Combining system dynamics, initial error, and initial error rate to produce functional values of system response time reduces this number to a manageable level.

SUMMARY OF EX
FOR ST

Parameters	Non-Predict	
	Manual	Dire
Prediction:		
Number of traces		
Period		
Repetition rate		
System:		
Dynamics	X	
Situation:		
Available time	X	
Initial error	X	
Initial error rate	X	X

TABLE 2

NTAL PROGRAM SHOWING SYSTEMS
) RELEVANT PARAMETERS

Simple Prediction		Flight Path Prediction	
Without Director	With Director	Fixed Director	Parametric Director
X	X		
X	X		
X	X	X	X
X	X	X	X
X	X	X	X
X	X	X	X
X	X	X	X

6-2. SUBJECTS

Six subjects with pilot experience have been selected for the investigation. It is intended that inexperienced subjects will also be used at a later stage to investigate the effects of experience on performance.

6-3. EXPERIMENTAL PROCEDURE

For each pair of tests, each subject is told to steer the vehicle to the "on course" line as quickly as possible, and to keep it on course until it passes through the gate. He is made familiar with each display by

- observing passively while a sample problem is run with each display
- by examining a static sketch describing the different displays and the information presented
- by practicing with each display to "get a feel" for the task.

The practice trials are different from any of the experimental trials. Since all conditions and display are counterbalanced in order of presentation, the effect of practice and of presentation sequency are distributed evenly over all conditions.

6-4. PERFORMANCE MEASURES

The following performance measures will be used in accordance with the performance criteria established in Section V.

A. MANEUVER SUCCESS

Final error and error rate are established for the time the vehicle passes through the gates from recorded data. These are compared with tolerable error conditions (i.e., a success envelope) to determine the success or failure of the maneuver.

For each experimental system, frequency distributions are made of final error and error rate magnitudes to determine characteristic residual error central tendencies and variances for each system.

B. MANEUVER TIME

For successful maneuvers, the time from the start of the problem to the point where control inputs cease (i.e., the subject is satisfied

with the maneuver) is recorded. This will be measured as a proportion of available (problem) time.

C. INTEGRATED STICK DISPLACEMENT

The amount of stick displacement is integrated over the time of the problem and recorded to produce a cummulative measure of the amount of effort involved in the maneuver.

D. STICK REVERSALS

The total number of control stick reversals during a trial is recorded for use as an ancillary measure of effort and as an indication of maneuver difficulty, control stick reversals having relationship to correction inputs.

E. TRAJECTORY DATA

The path taken by the vehicle during each trial is recorded on an X-Y plotter. This permits analysis of detailed performance to analyze error tendencies (e.g., whether a particular system tends to produce late errors, or many small errors as opposed to a few large ones).

F. OPINIONS OF TEST SUBJECTS

In addition to the objective measures indicated, subjective reactions to each system are solicited after each test series to obtain user opinions on the qualities of each of the systems. A prepared questionnaire is used for this purpose.

The data obtained in the experimental procedures outlined will be sufficient to establish functional relationships for the performance of each of the manual control systems considered, in terms of the relevant parameters.

SECTION VII

BIBLIOGRAPHY

1. N.R.L. Report 4333, H. P. Birmingham, and F. V. Taylor, A Human Engineering Approach to the Design of Man-Operated Continuous Control Systems, April 1954

2. G. S. Brown, and D. P. Campbell, Principles of Servomechanisms, John Wiley, New York, 1948

APPENDIX A

TRANSIENT RESPONSE OF SECOND ORDER SYSTEM SUBJECT TO INITIAL ERROR RATE

The transient response of a second order system subject to an initial error rate ($\dot{y}_o$) may be determined conveniently by the application of the complete Laplace transform including the terms associated with initial conditions (reference 2).

The displacement error in terms of the Laplace variable $\underline{S}$ is

$$E(S) = \frac{-\dot{y}_o}{S^2 + 2\zeta\omega_n S + \omega_n^2} = \frac{K_1}{S - r_1} + \frac{K_2}{S - r_2} \tag{1}$$

where r_1 and r_2 are the roots of the characteristic equation, and the K's are coefficients which may be determined as follows.

$$K_1 = \lim_{S \to r_1} E(S)\,(S - r_1) = -\dot{y}_o/(r_1 - r_2)$$

$$K_2 = \lim_{S \to r_2} E(S)\,(S - r_2) = -\dot{y}_o/(r_2 - r_1) \tag{2}$$

Therefore,

$$E(S) = \frac{-\dot{y}_o/(r_1 - r_2)}{S - r_1} - \frac{\dot{y}_o/(r_2 - r_1)}{S - r_2} \tag{3}$$

The corresponding displacement in the time domain $\epsilon(t)$ is

$$\epsilon(t) = \frac{-\dot{y}_o}{r_1 - r_2}\,(e^{r_1 t} - e^{r_2 t}) \tag{4}$$

When $\zeta < 1$, for which case the system is underdamped,

$$r_1 = -\zeta\omega_n + j\omega_n\sqrt{1-\zeta^2}$$
$$r_2 = -\zeta\omega_n - j\omega_n\sqrt{1-\zeta^2} \tag{5}$$

The displacement function $\epsilon(t)$ in equation (4) may be reduced using equations (5) and the Euler relationship

$$e^{j\theta} = \cos\theta + j\sin\theta \tag{6}$$

$$\epsilon(t) = \frac{-\dot{y}_o}{\omega_n\sqrt{1-\zeta^2}}\, e^{-\zeta\omega_n t}\sin\left(\omega_n t\sqrt{1-\zeta^2}\right) \tag{7}$$

When $\zeta > 1$, representing an overdamped system,

$$r_1 = -\zeta\omega_n - \omega_n\sqrt{\zeta^2-1}$$
$$r_2 = -\zeta\omega_n + \omega_n\sqrt{\zeta^2-1} \tag{8}$$

and equation (4) may be transformed to

$$\epsilon(t) = \frac{-\dot{y}_o}{\omega_n\sqrt{\zeta^2-1}}\sinh\left(\omega_n t\sqrt{\zeta^2-1}\right) \tag{9}$$

When $\zeta = 1$, the system is critically damped, the roots r_1 and r_2 are both equal to $-\omega_n$, and the coefficient K is

$$K = \lim_{S \to r} E(S)\,(S-r)^2 = -\dot{y}_o \tag{10}$$

Therefore

$$E(S) = \frac{-\dot{y}_o}{(S+\omega_n)^2} \tag{11}$$

The displacement function in the time domain becomes

$$\epsilon(t) = -\dot{y}_o t\ e^{-\omega_n t} \qquad (12)$$

Equations (7), (9), and (12) represent the transient response of the system depicted in figure 10.

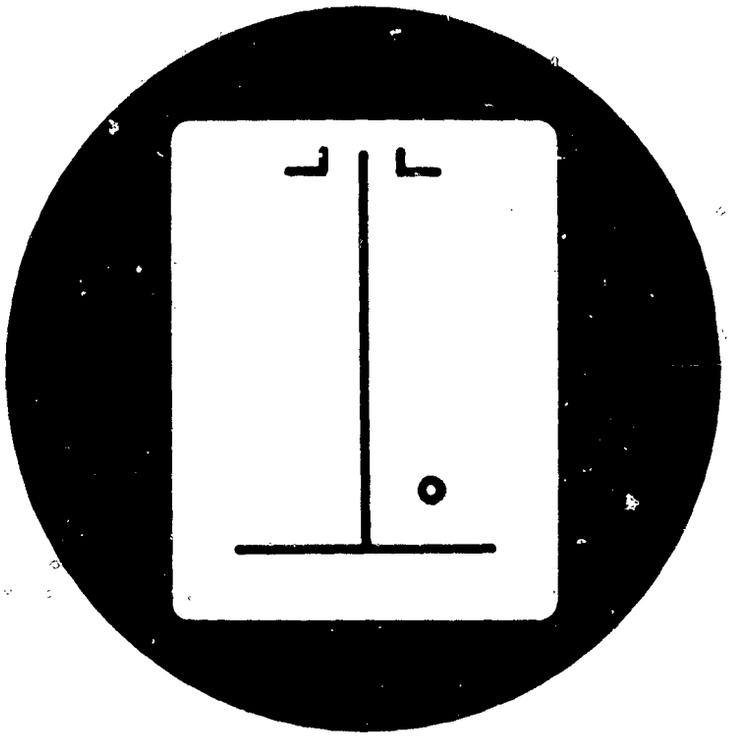

FIGURE 1. SAMPLE MANUAL CONTROL DISPLAY

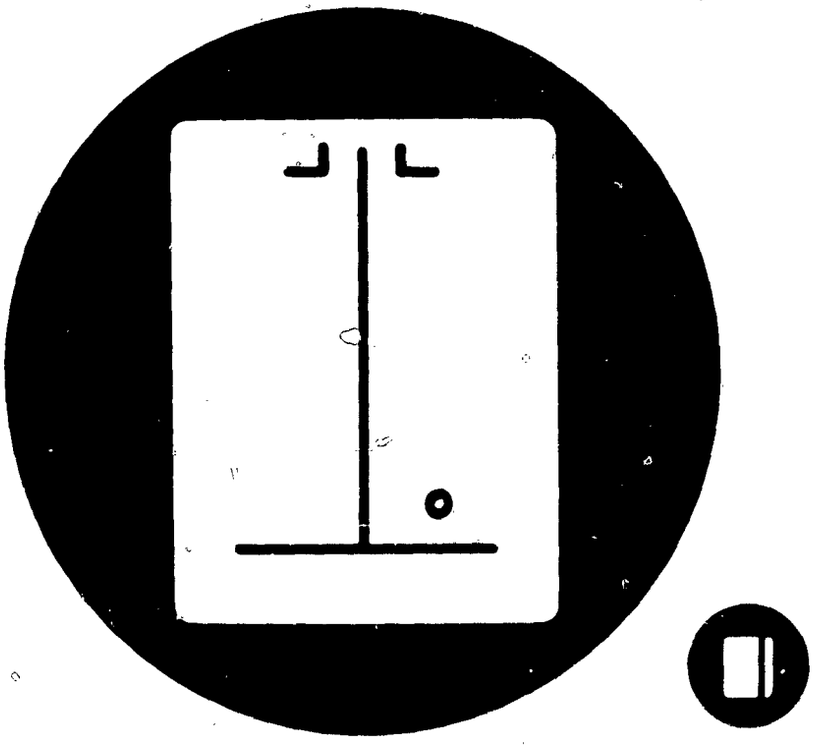

FIGURE 2. DISPLAY FOR DIRECTOR CONTROL

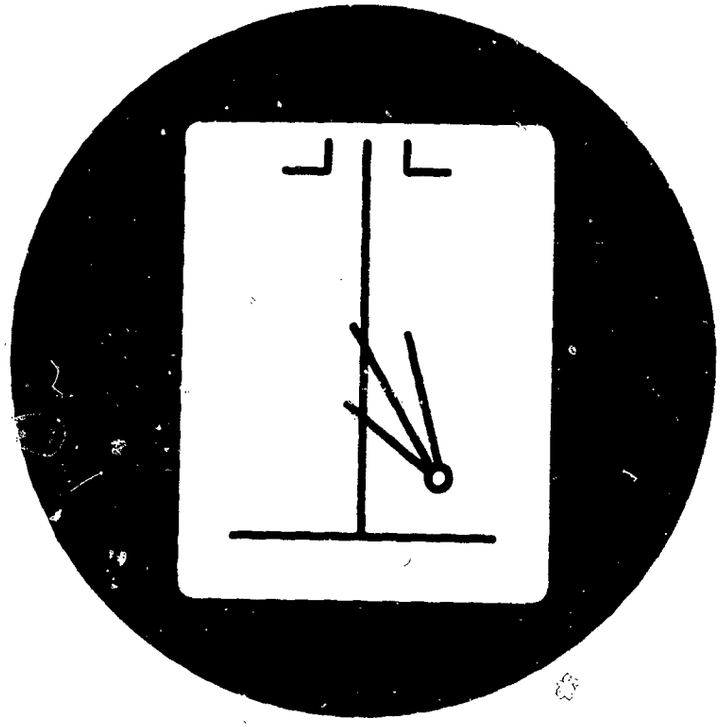

FIGURE 3. DISPLAY FOR SIMPLE PREDICTION

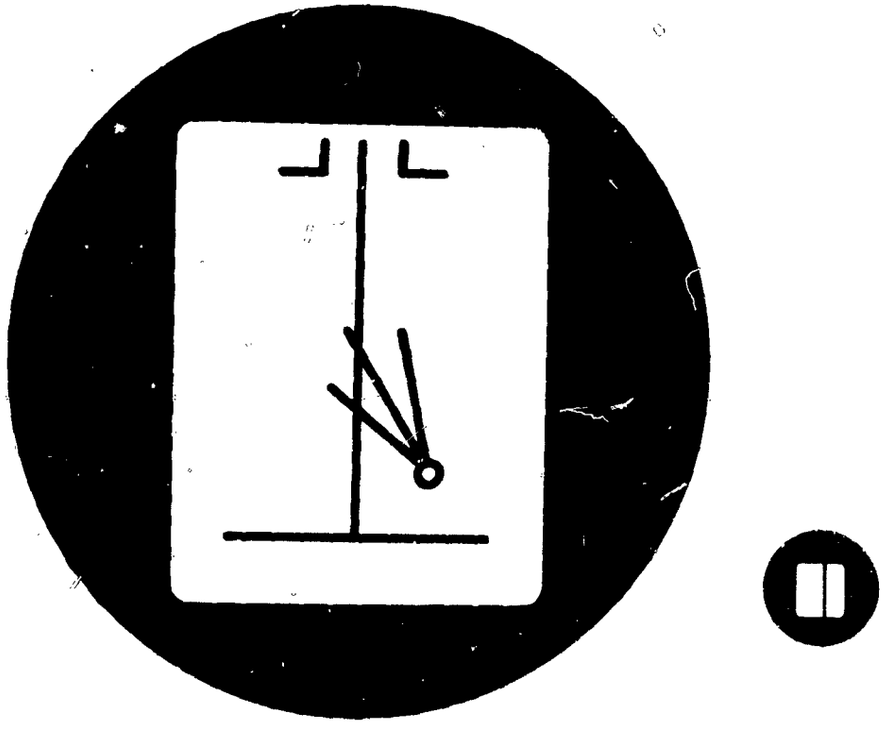

FIGURE 4. DISPLAY FOR SAMPLE PREDICTION WITH DIRECTOR CONTROL

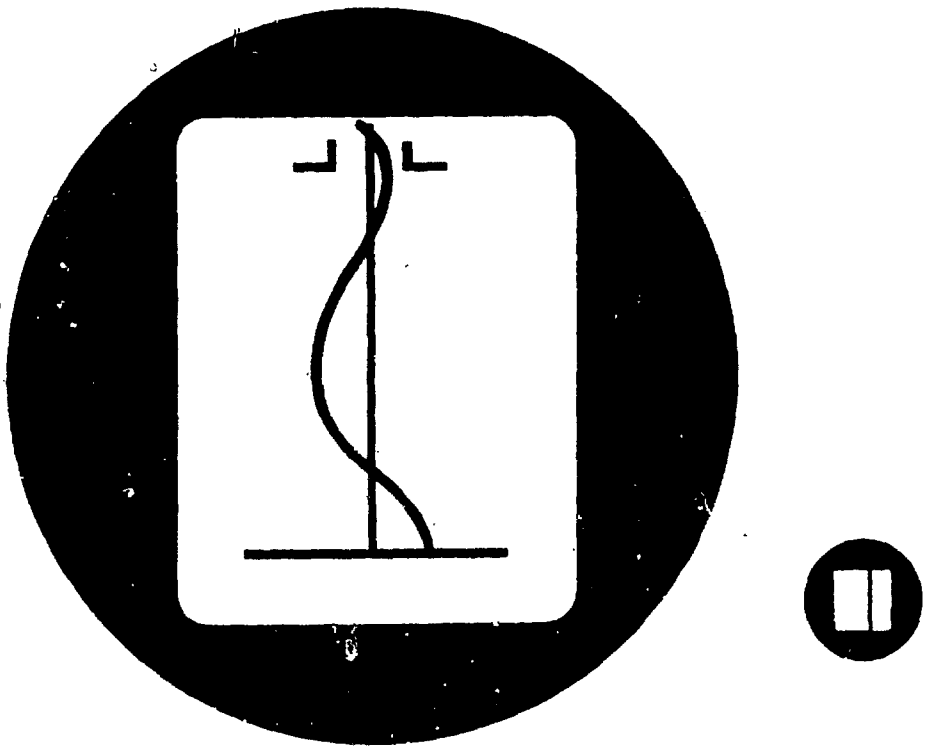

FIGURE 5. DISPLAY FOR FLIGHT PATH PREDICTION WITH DIRECTOR CONTROL

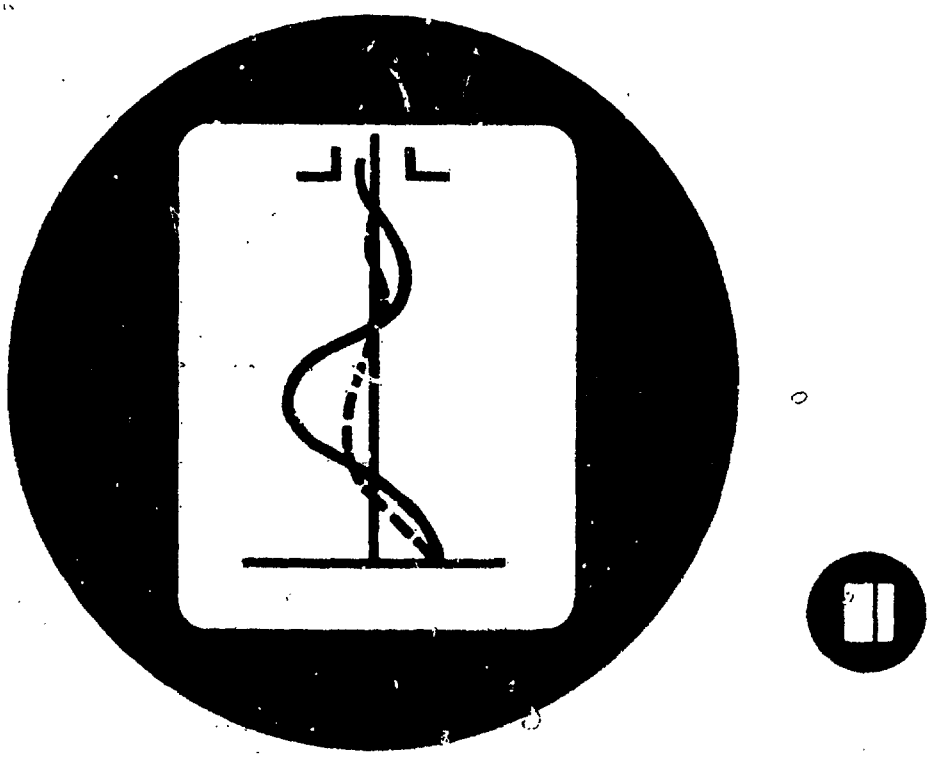

FIGURE 6. DISPLAY FOR FLIGHT PATH PREDICTION WITH PARAMETRIC DIRECTOR CONTROL

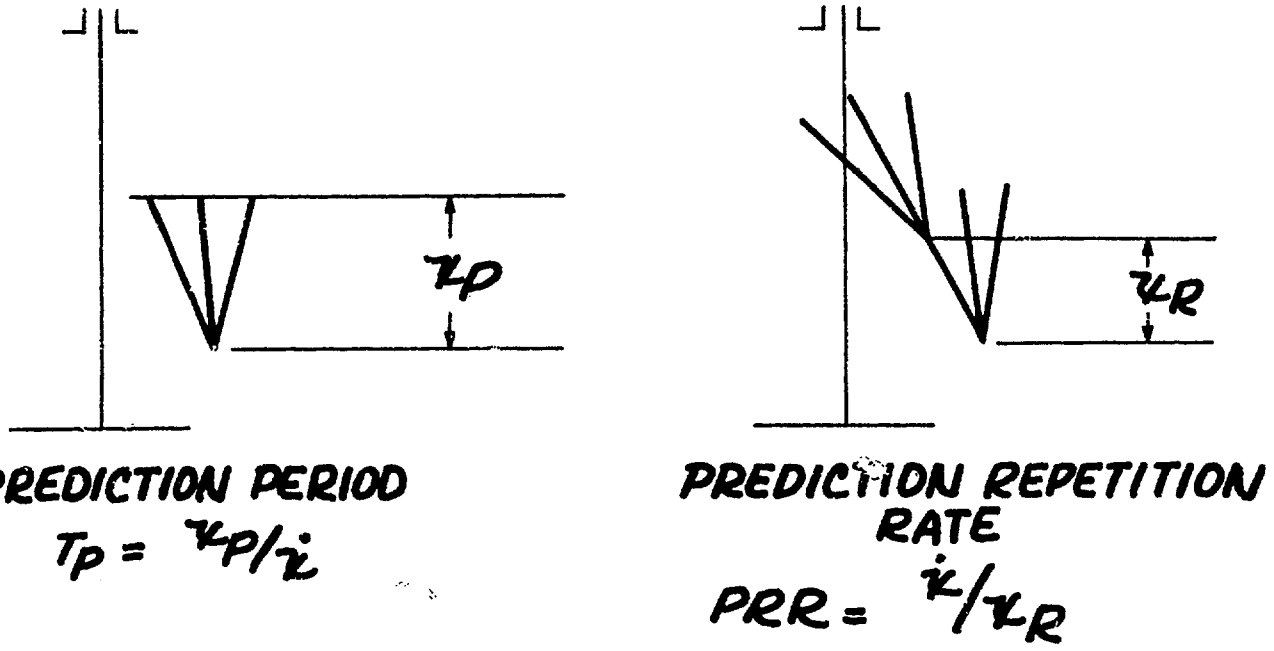

FIGURE 7. DEFINITION OF PREDICTION PARAMETERS

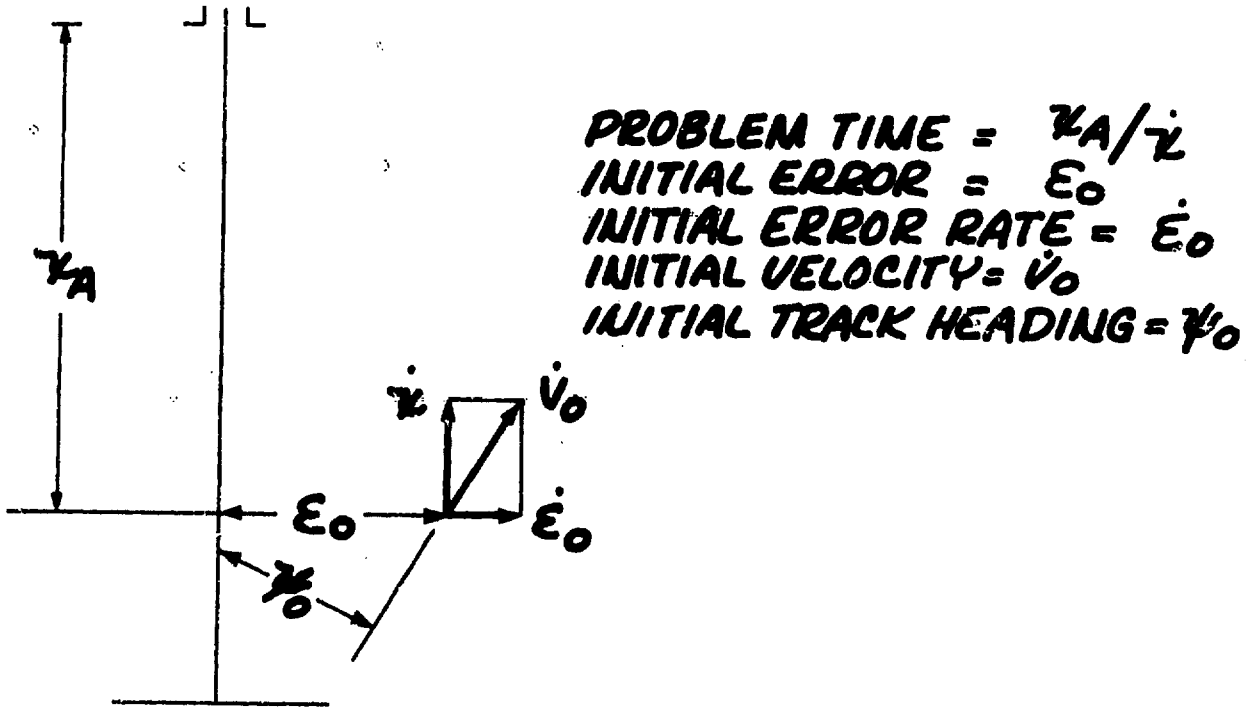

FIGURE 8. DEFINITION OF PROBLEM PARAMETERS

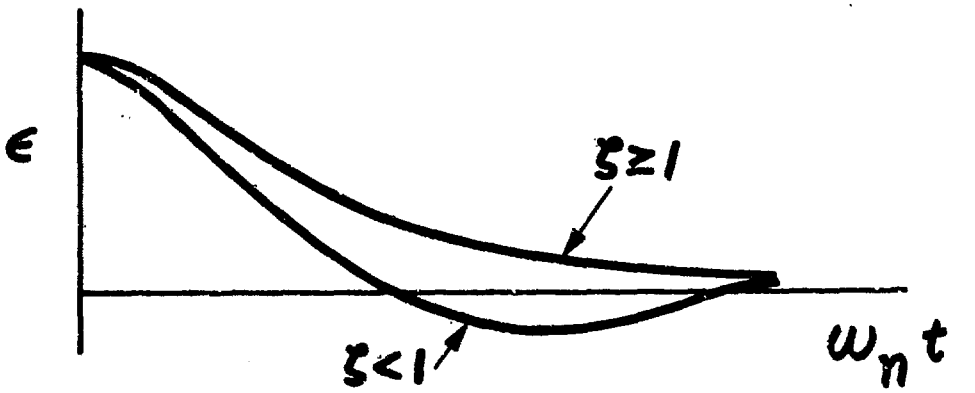

FIGURE 9. TRANSIENT RESPONSE OF SECOND ORDER SYSTEM SUBJECT TO INITIAL POSITION ERROR

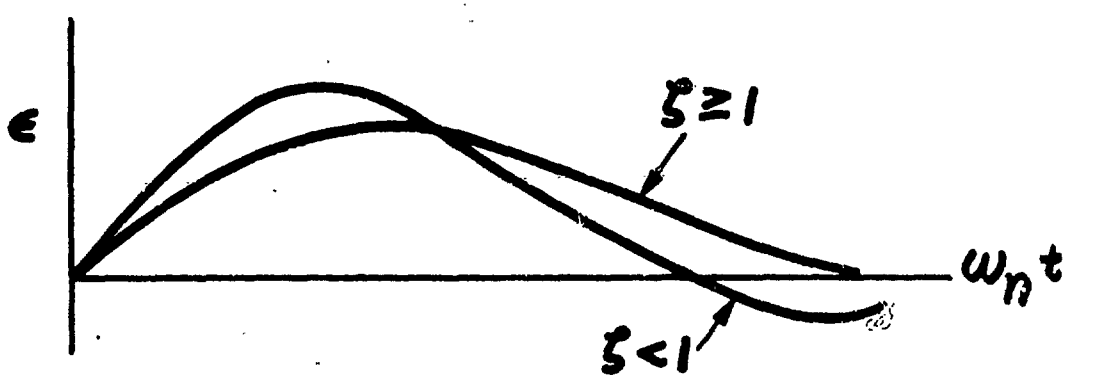

FIGURE 10. TRANSIENT RESPONSE OF SECOND ORDER SYSTEM SUBJECT TO INITIAL ERROR RATE

FIGURE 11. OVERALL VIEW OF PREDICTIVE INSTRUMENTATION COMPLEX

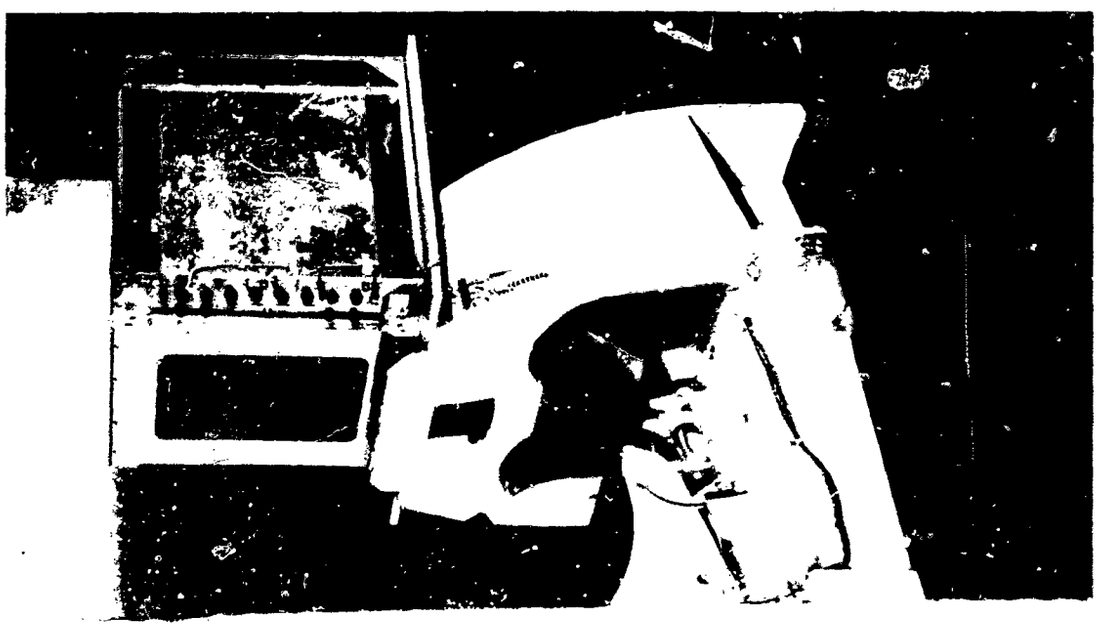

FIGURE 12 PREDICTIVE INSTRUMENTATION
SUBJECT'S STATION

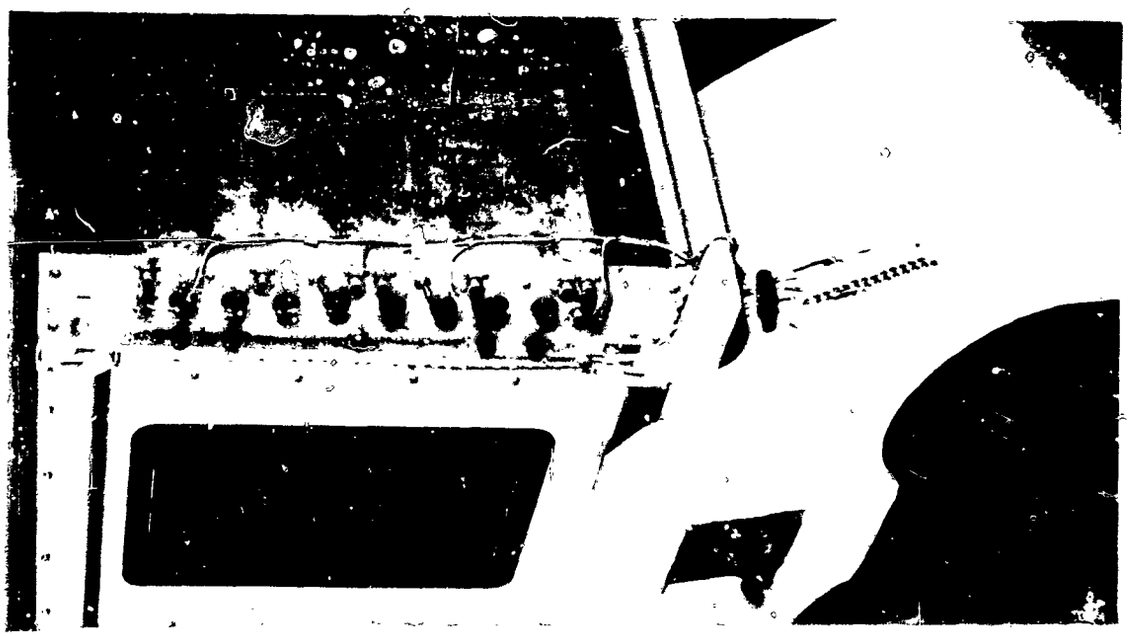

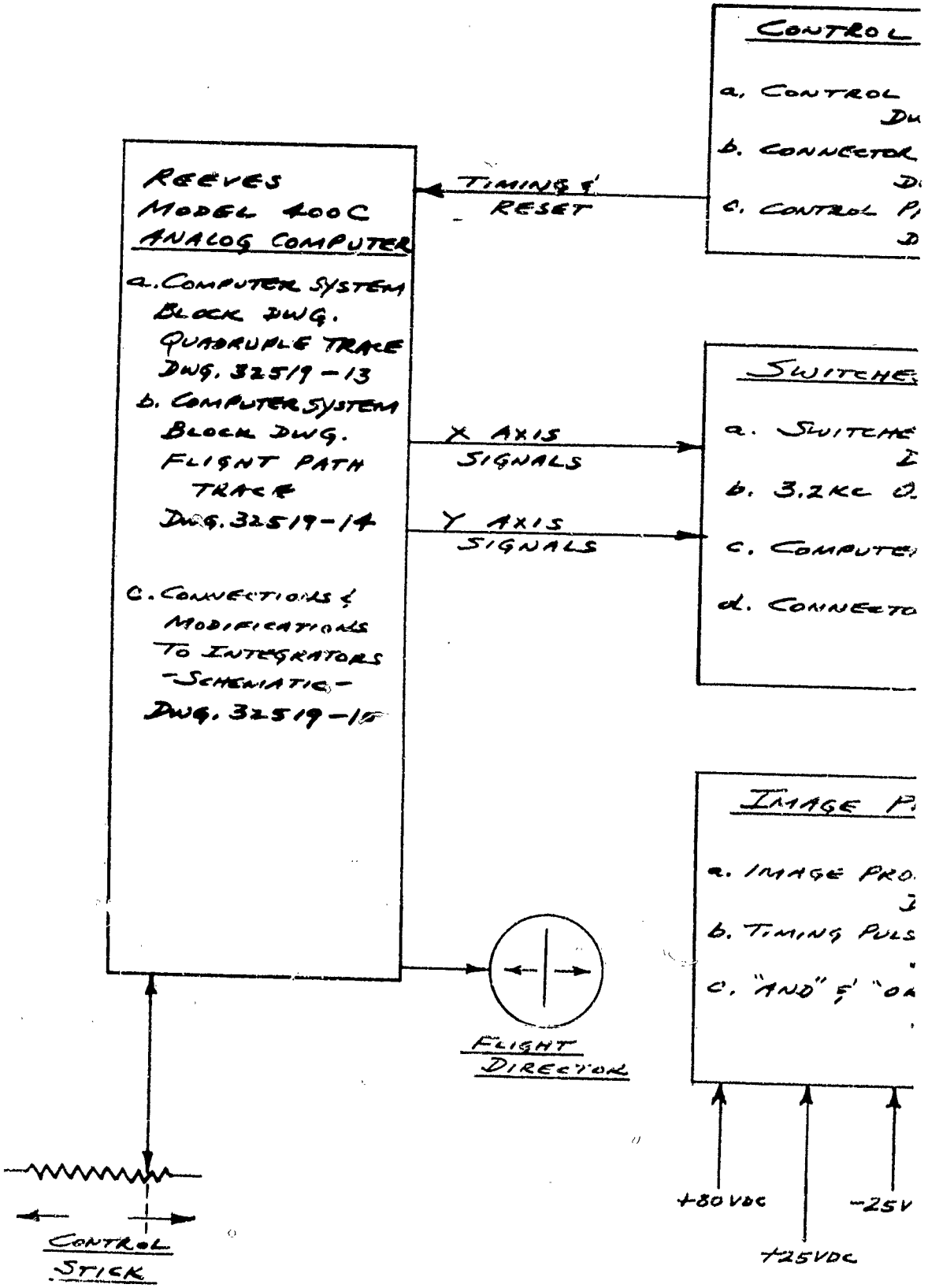
REEVES
MODEL 400C
ANALOG COMPUTER
a. COMPUTER SYSTEM
BLOCK DWG.
QUADRUPLE TRACE
DWG. 32519-13
b. COMPUTER SYSTEM
BLOCK DWG.
FLIGHT PATH
TRACE
DWG. 32519-14
c. CONNECTIONS &
MODIFICATIONS
TO INTEGRATORS
-SCHEMATIC-
DWG. 32519-15
TIMING & RESET
X AXIS
SIGNALS
Y AXIS
SIGNALS
CONTROL
a. CONTROL
b. CONNECTOR
c. CONTROL
SWITCHE
a. SWITCHE
b. 3.2KC
c. COMPUTE
d. CONNECTO
IMAGE P
a. IMAGE PRO
b. TIMING PULS
c. "AND" &
FLIGHT
DIRECTOR
CONTROL
STICK
+80 VDC
+25VDC
-25V

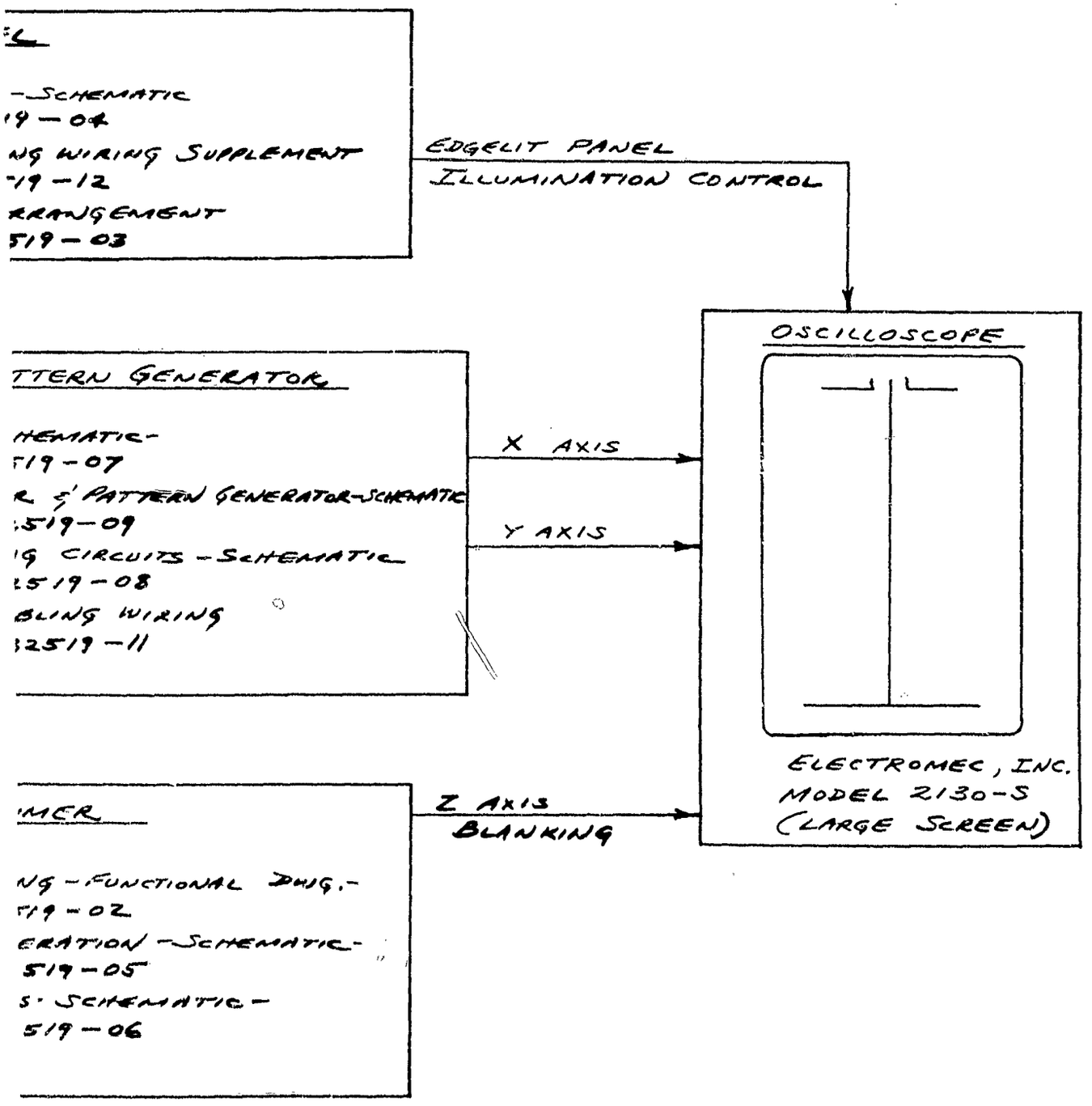

FIGURE 13
SYSTEM BLOCK DIAGRAM

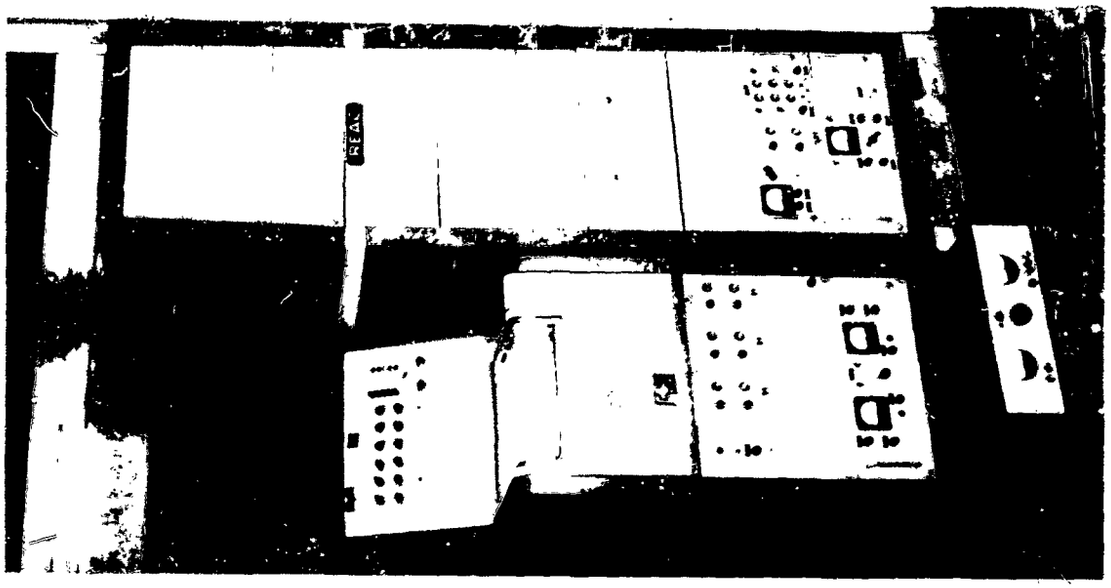

FIGURE 14 REAC 400 COMPUTER

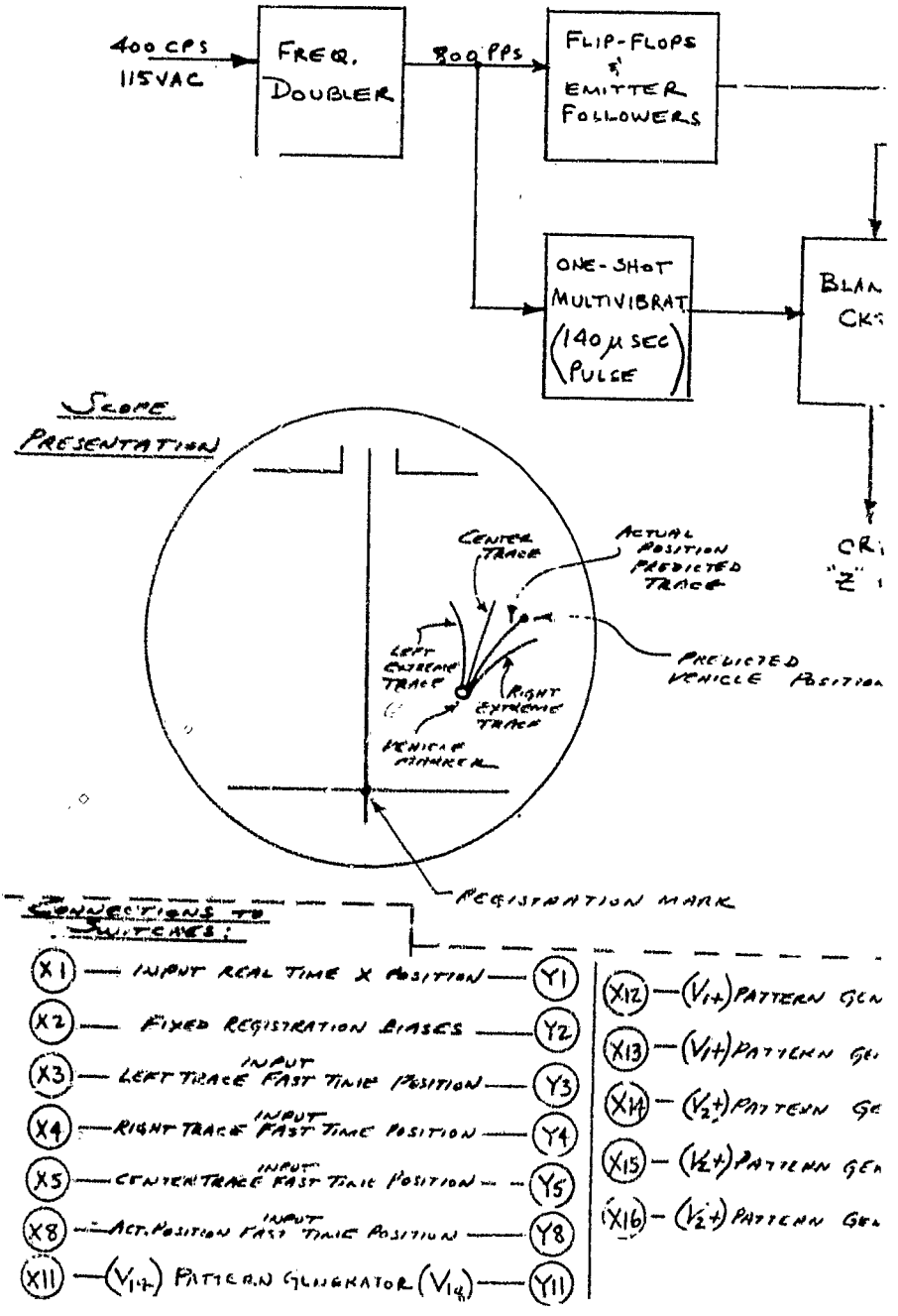
400 CPS
115VAC
FREQ. DOUBLER
800 PPS
FLIP-FLOPS & EMITTER FOLLOWERS
ONE-SHOT MULTIVIBRAT (140 μ SEC PULSE)
SCOPE PRESENTATION
CENTER TRACE
ACTUAL POSITION PREDICTED TRACE
PREDICTED VEHICLE POSITION
LEFT EXTREME TRACE
RIGHT EXTREME TRACE
REGISTRATION MARK
CONNECTIONS TO SWITCHES:
X1 — INPUT REAL TIME X POSITION — Y1
X2 — FIXED REGISTRATION BIASES — Y2
X3 — LEFT TRACE INPUT FAST TIME POSITION — Y3
X4 — RIGHT TRACE INPUT FAST TIME POSITION — Y4
X5 — CENTER TRACE INPUT FAST TIME POSITION — Y5
X8 — ACT. POSITION INPUT FAST TIME POSITION — Y8
X11 — (V1+) PATTERN GENERATOR (V1-) — Y11
X12 — (V1+) PATTERN GEN
X13 — (V1+) PATTERN GE
X14 — (V2+) PATTERN GE
X15 — (V2+) PATTERN GEN
X16 — (V2+) PATTERN GEN

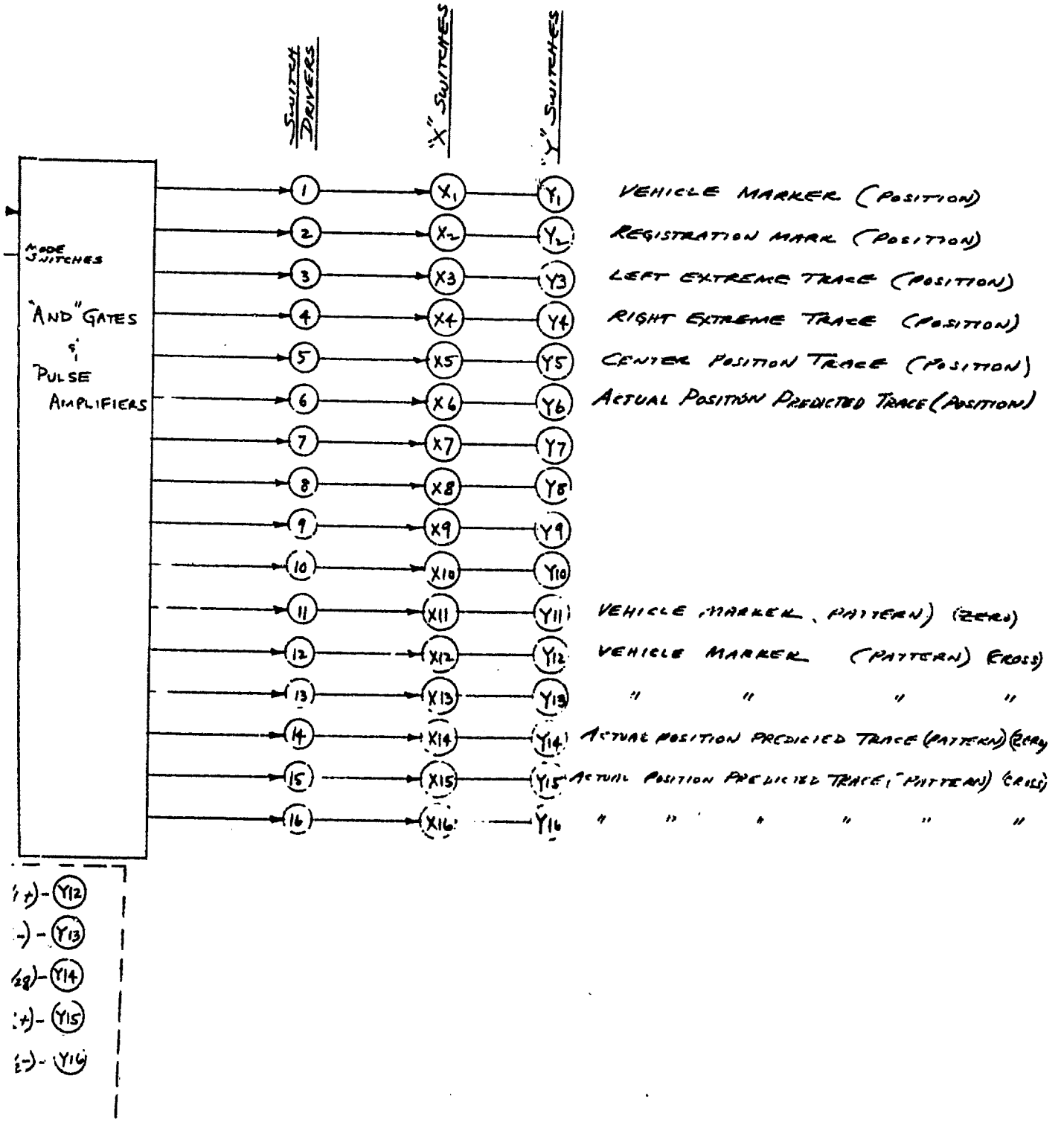

FIGURE 15
IMAGE PROGRAMMING - FUNCTIONAL DRAWING

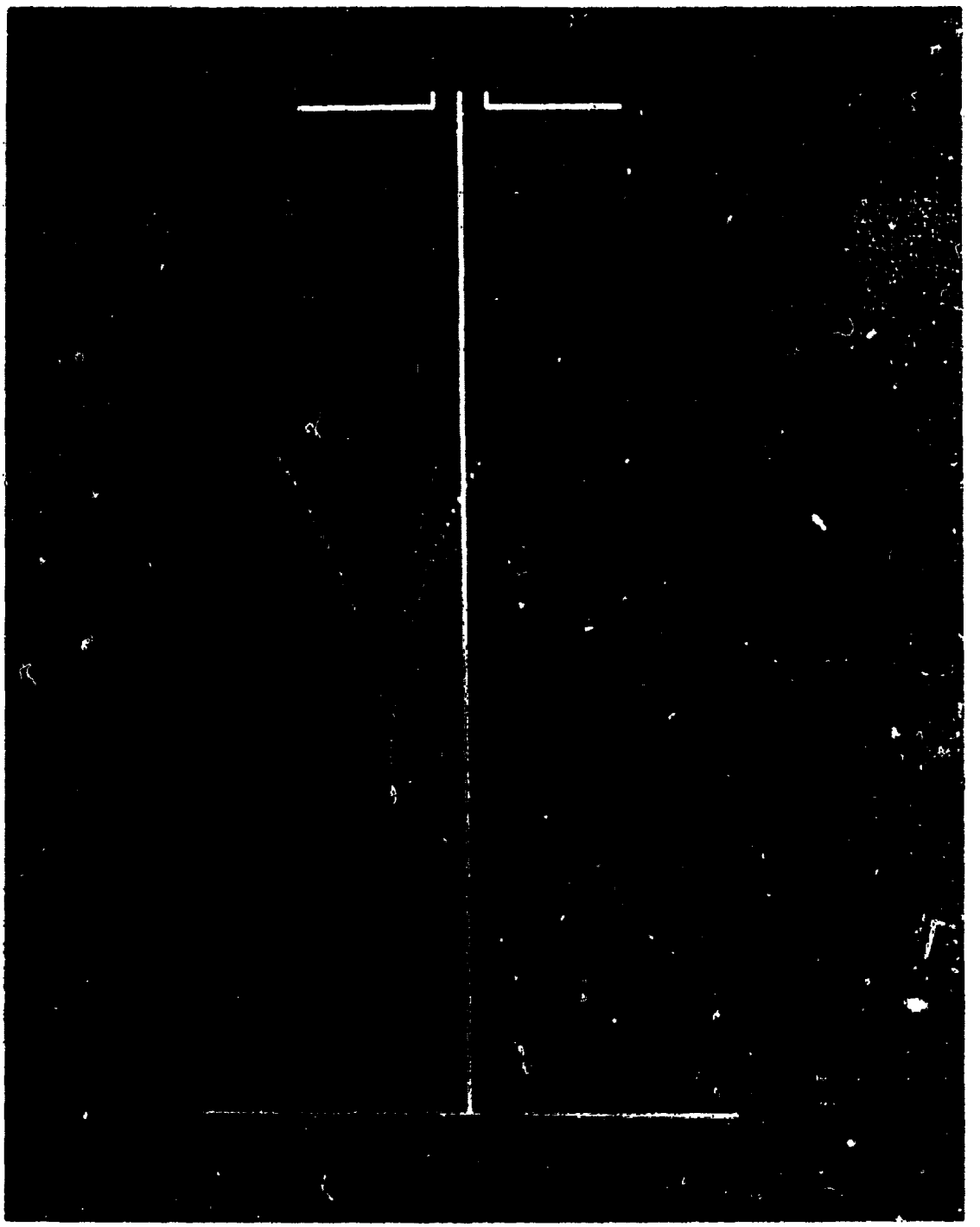

FIGURE 16. PREDICTIVE INSTRUMENTATION DISPLAY

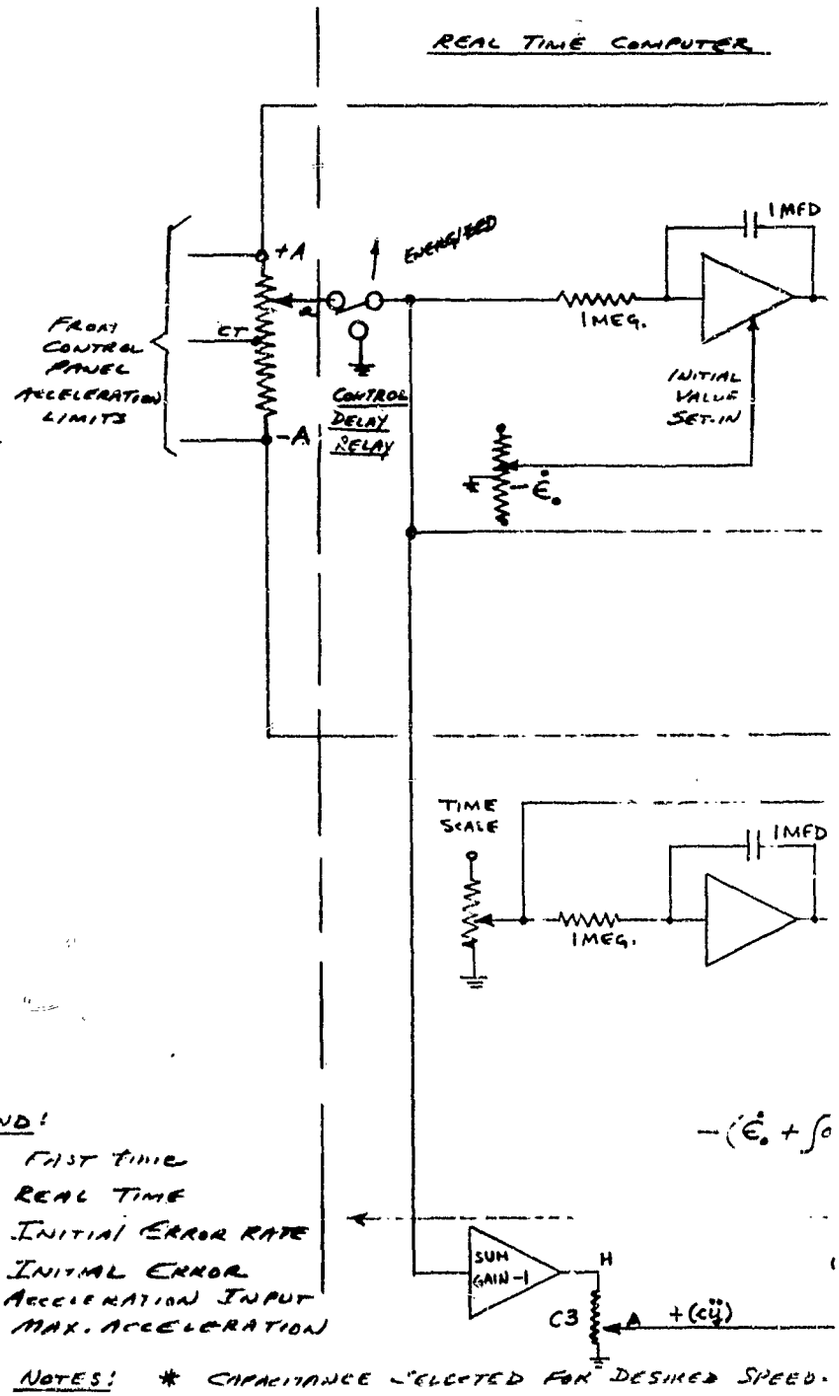

LEGEND:

t = FAST TIME

T = REAL TIME

$\dot{\epsilon}_0$ = INITIAL ERROR RATE

ϵ_0 = INITIAL ERROR

a = ACCELERATION INPUT

A = MAX. ACCELERATION

NOTES: * CAPACITANCE SELECTED FOR DESIRED SPEED.

TO 500 μa

ZERO READER M

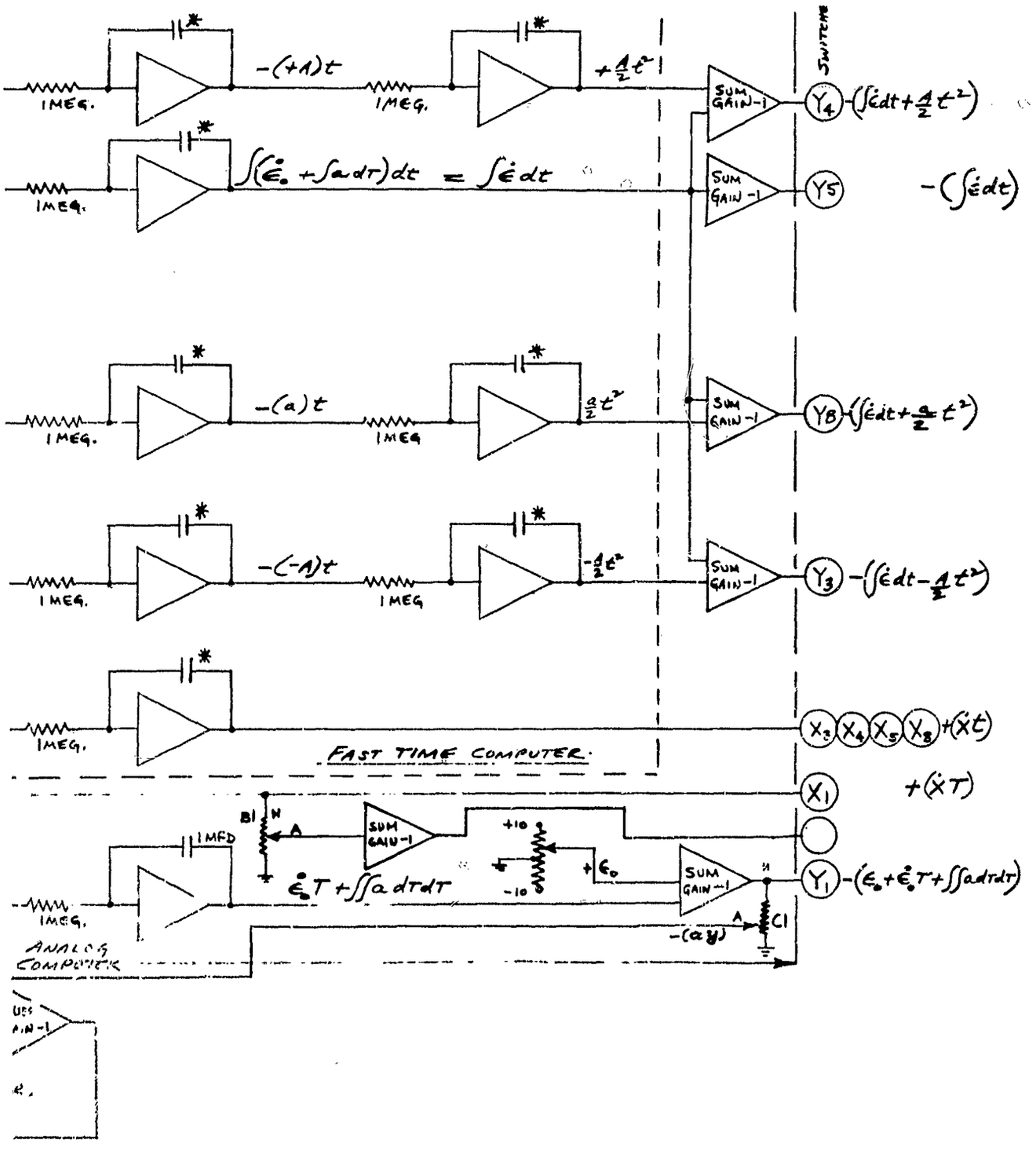

FIGURE 17
COMPUTER SYSTEM BLOCK DIAGRAM—QUADRUPLE TRACE

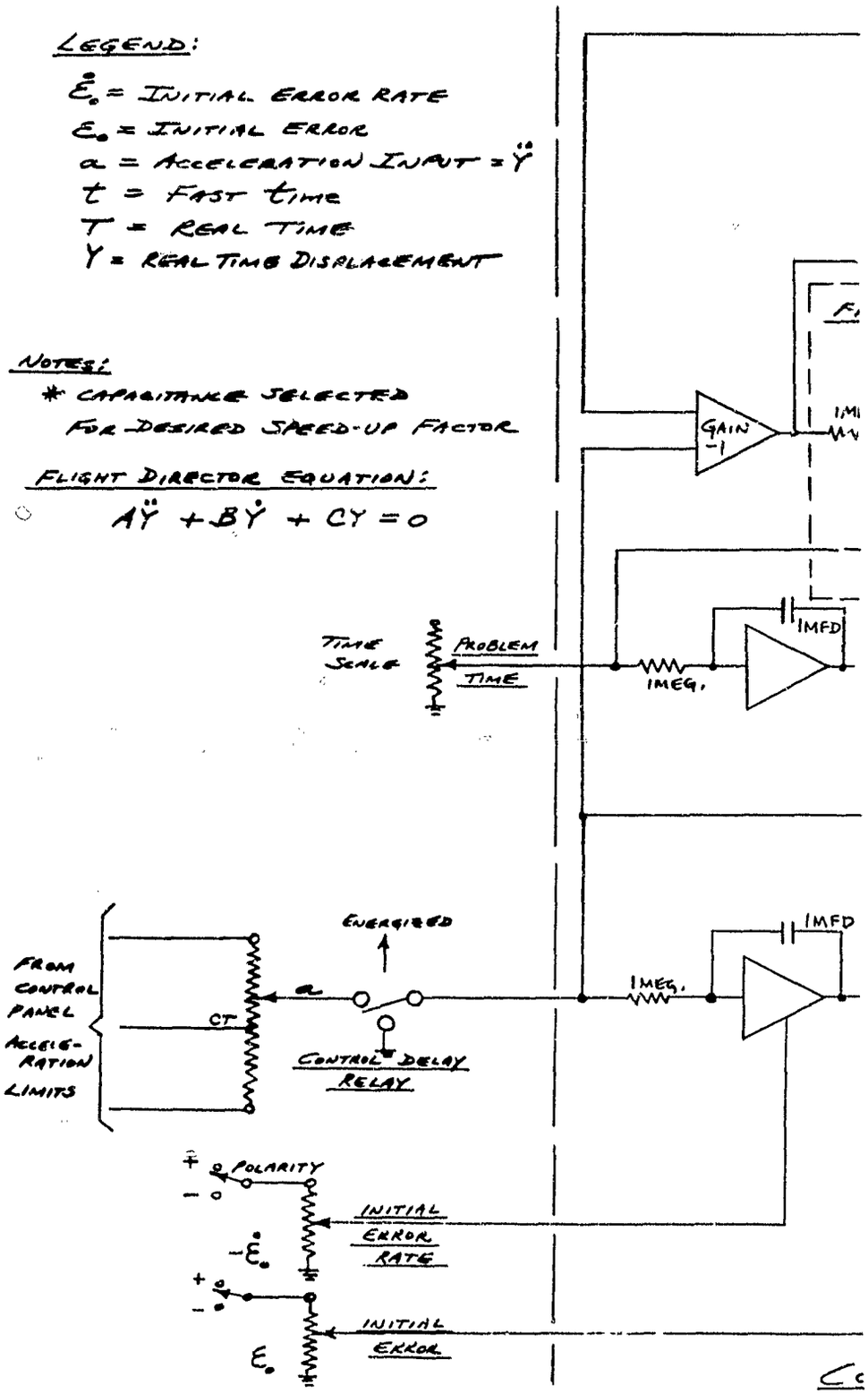
LEGEND:
$\dot{\varepsilon}_o$ = INITIAL ERROR RATE
ε_o = INITIAL ERROR
a = ACCELERATION INPUT = $\ddot{y}$
t = FAST TIME
T = REAL TIME
Y = REAL TIME DISPLACEMENT
NOTES:
* CAPACITANCE SELECTED FOR DESIRED SPEED-UP FACTOR
FLIGHT DIRECTOR EQUATION:
$A\ddot{Y} + B\dot{Y} + CY = 0$
GAIN -1
1MFD
TIME SCALE
PROBLEM TIME
1MEG.
ENERGIZED
FROM CONTROL PANEL
ACCELE-RATION LIMITS
CT
CONTROL DELAY RELAY
POLARITY
INITIAL ERROR RATE
INITIAL ERROR

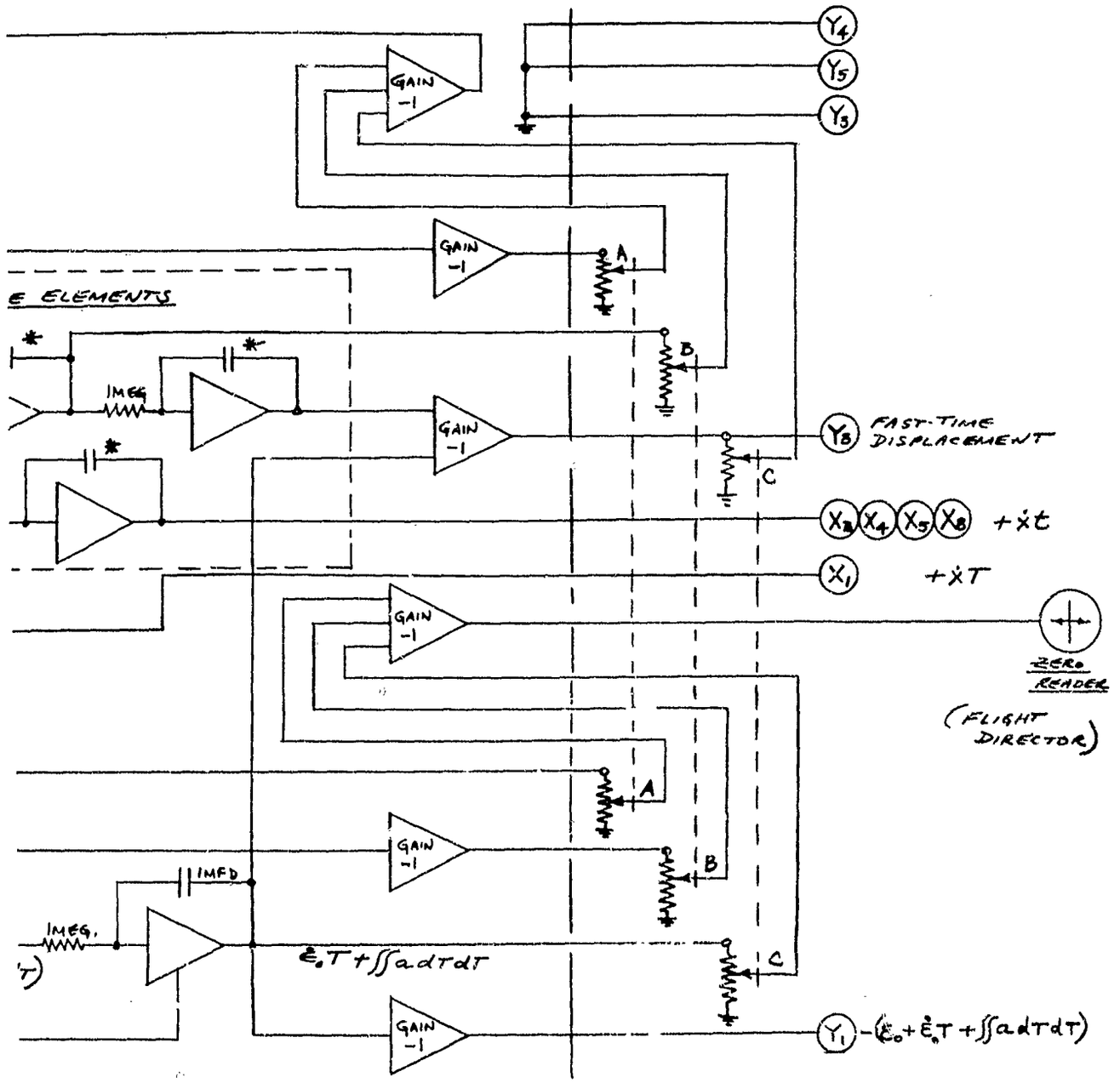

ER

FIGURE 18
COMPUTER SYSTEM BLOCK DIAGRAM–FLIGHT PATH TRACE

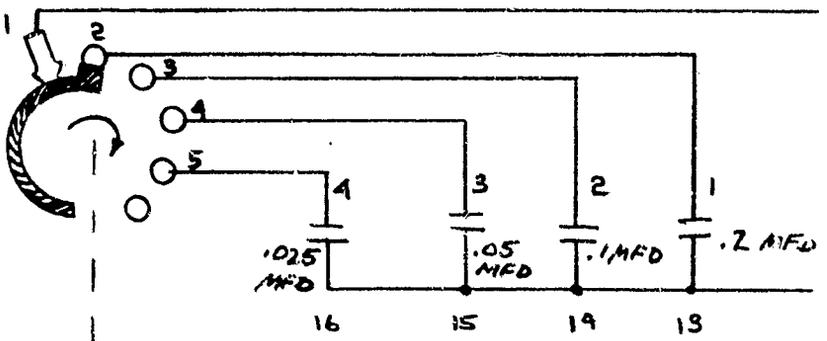

FIVE DECK,
10 POLE
ROTARY SWITCH
SAN 601135-505

[MOUNTED ON FRONT PANEL]

NOTES:

* — SPARE PINS (2)

ABOVE ARRANGEMENT, REPEATED 9 TI
(9 SECTIONS, OF 10, ON ROTARY SWITCH

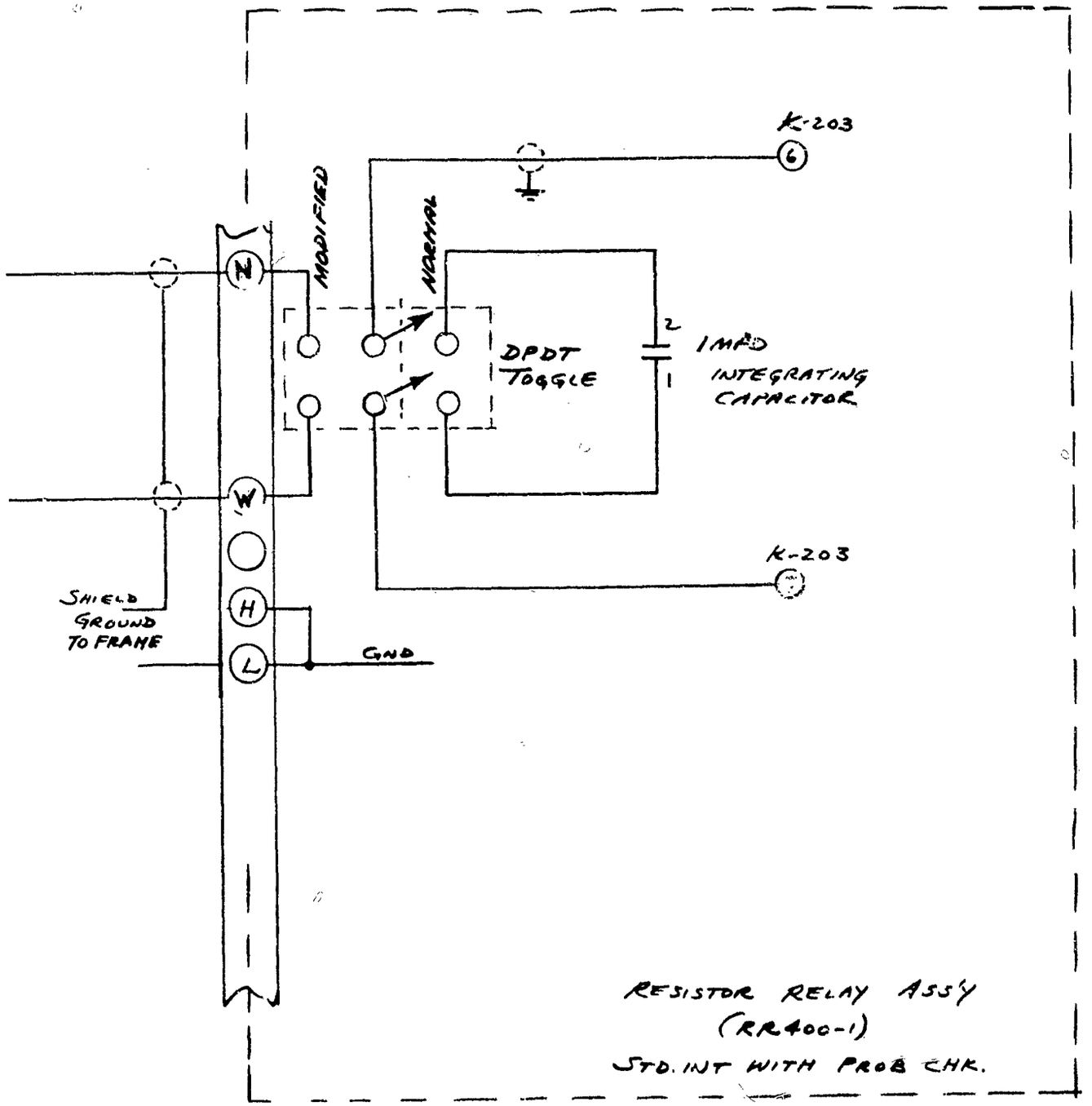

FIGURE 19
CONNECTIONS AND MODIFICATIONS TO INTEGRATORS – SCHEMATIC DIAGRAM

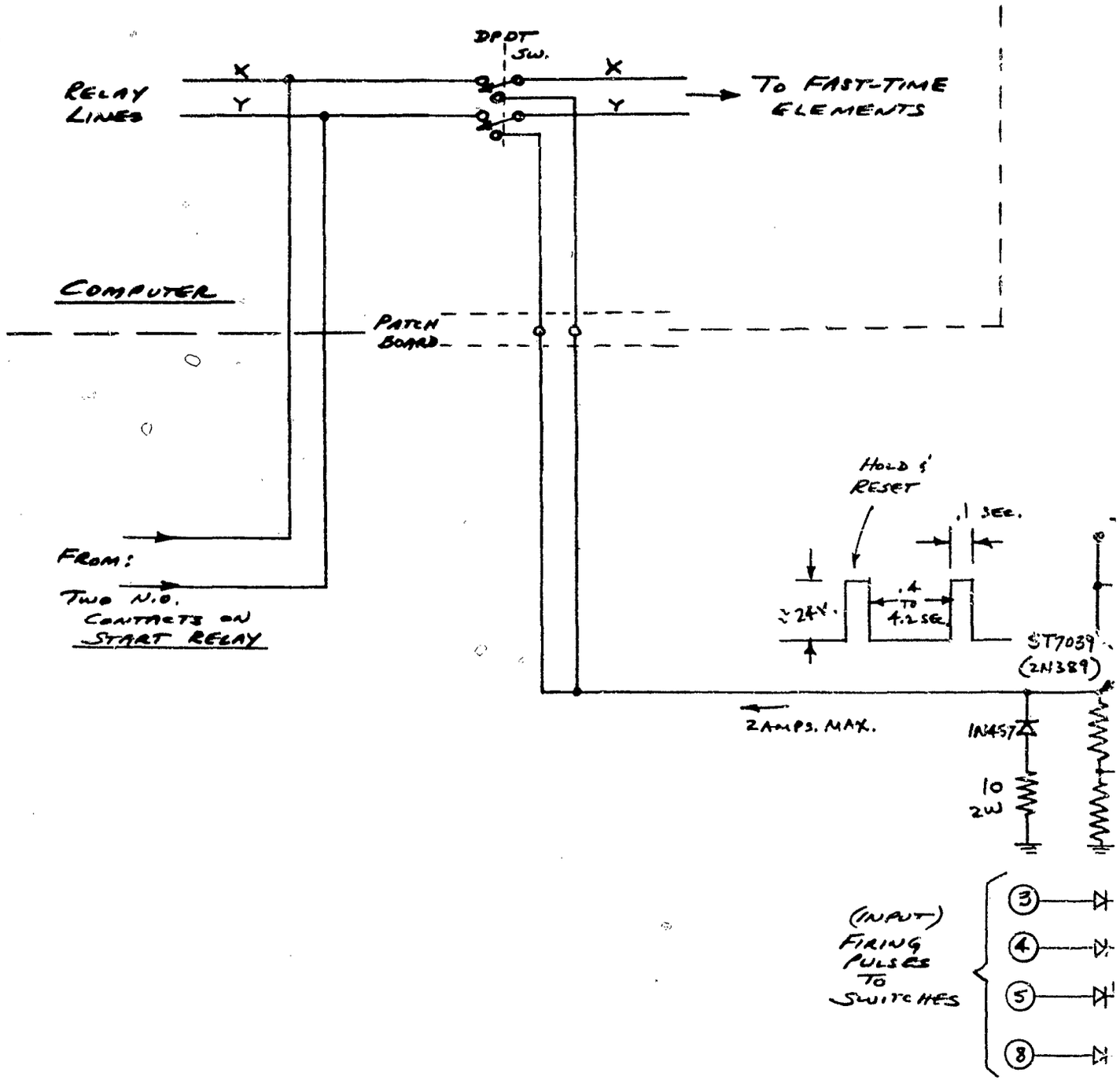

NOTES:

1. ALL RESISTORS ARE IN OHMS, ½ WATT 5% EXCEPT AS INDICATE
2. ALL CAPACITORS ARE IN PICO-FARADS, EXCEPT AS INDICATED.
3. ABOUT A 4" x 4" HEAT SINK IS REQ'D FOR THE ST 7039.

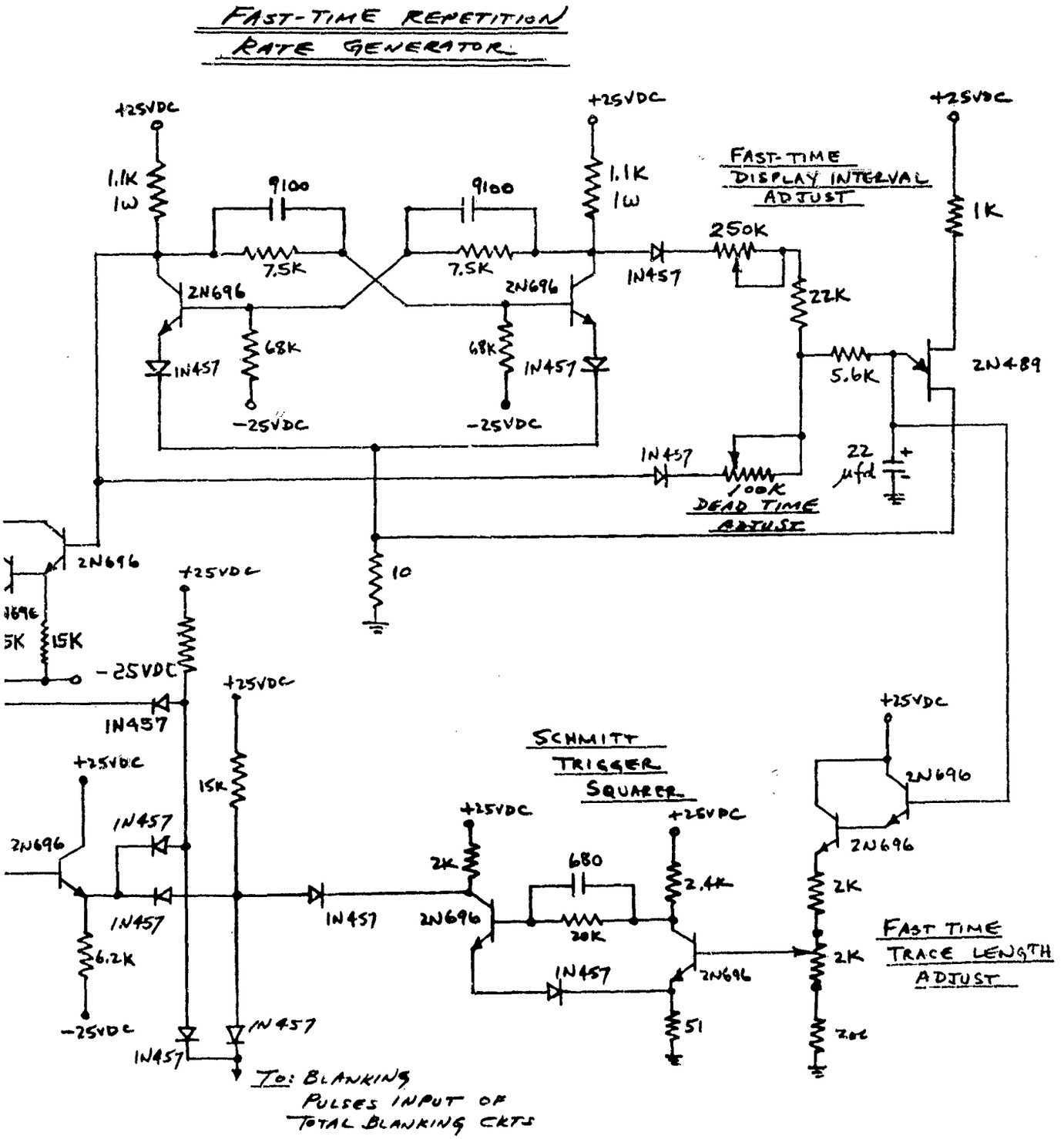

FIGURE 20
COMPUTER TIMING CIRCUITS – SCHEMATIC DIAGRAM

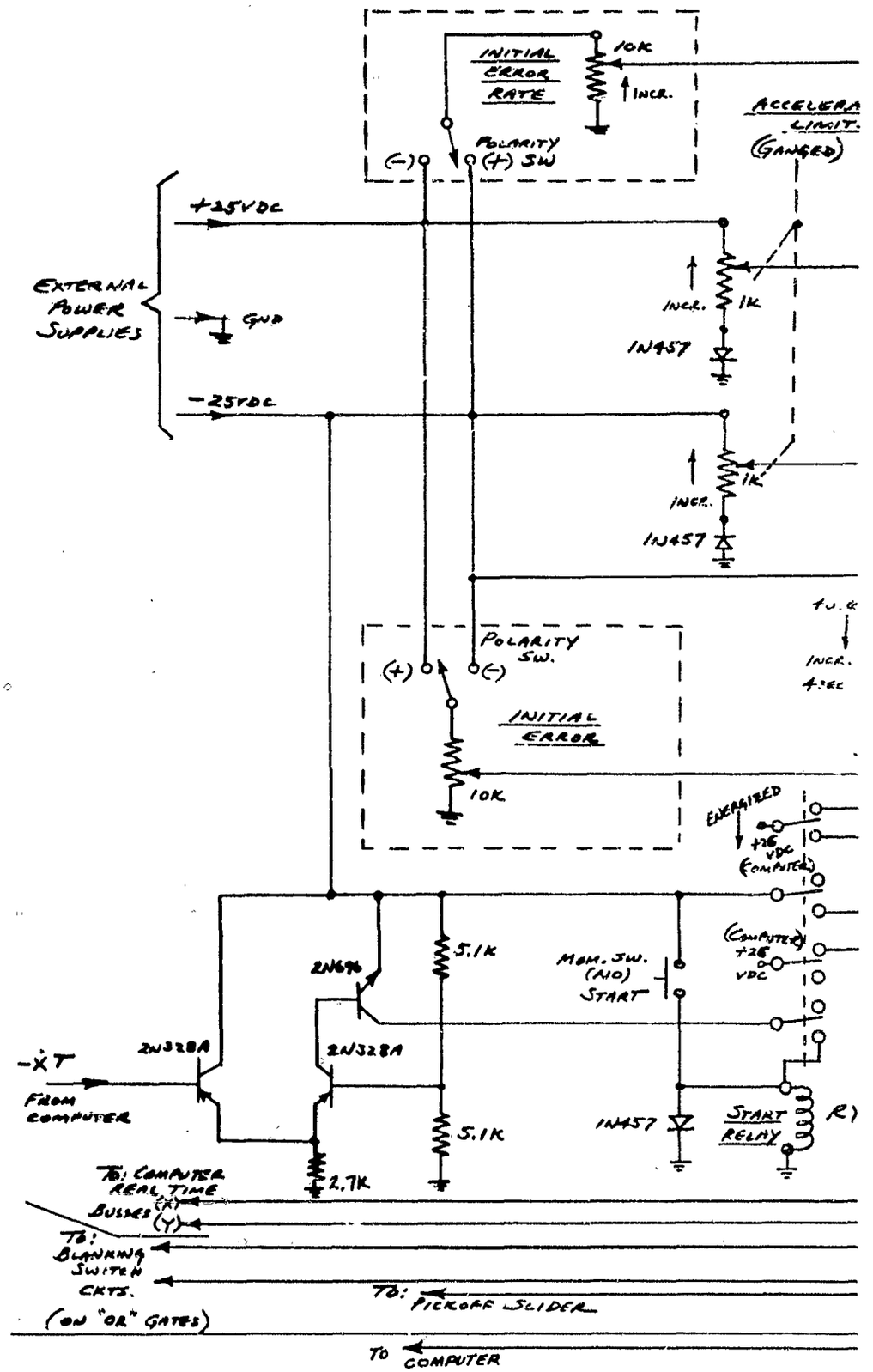
INITIAL ERROR RATE
10K
INCR.
POLARITY (+) SW
(-)
ACCELERA LIMIT. (GANGED)
+25VDC
EXTERNAL POWER SUPPLIES
GND
-25VDC
INCR.
1K
IN457
INCR.
1K
IN457
POLARITY SW.
(+)
(-)
INITIAL ERROR
10K
INCR.
4 SEC
ENERGIZED
+26 VDC (COMPUTER)
(COMPUTER) +26 VDC
MOM. SW. (A10) START
5.1K
2N696
2N328A
2N328A
-Ẋ T
FROM COMPUTER
5.1K
2.7K
IN457
START RELAY
R)
TO: COMPUTER REAL TIME BUSSES (X)
(Y)
TO: BLANKING SWITCH CKTS. (ON "OR" GATES)
TO: PICKOFF SLIDER
TO COMPUTER

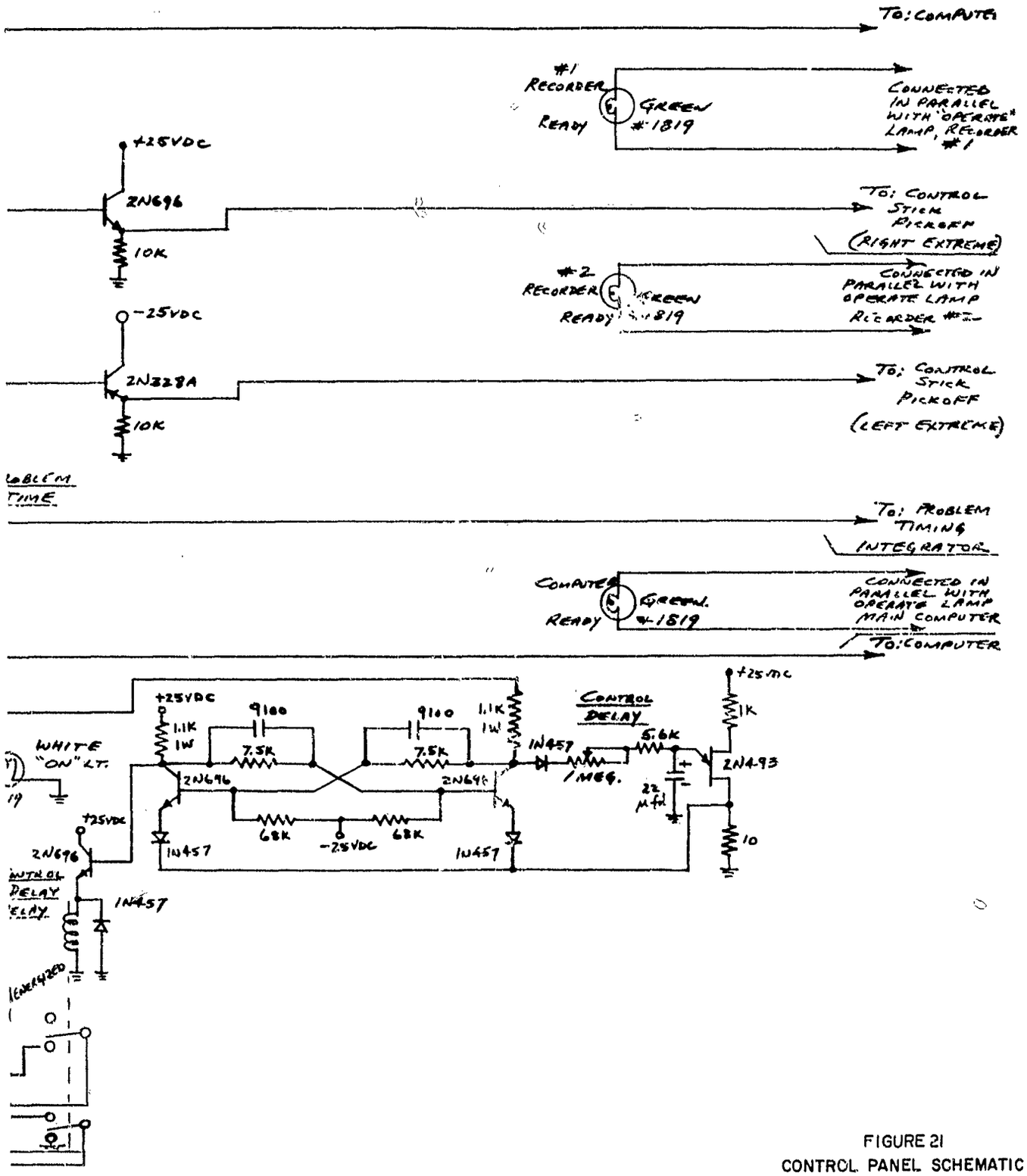

FIGURE 21
CONTROL PANEL SCHEMATIC

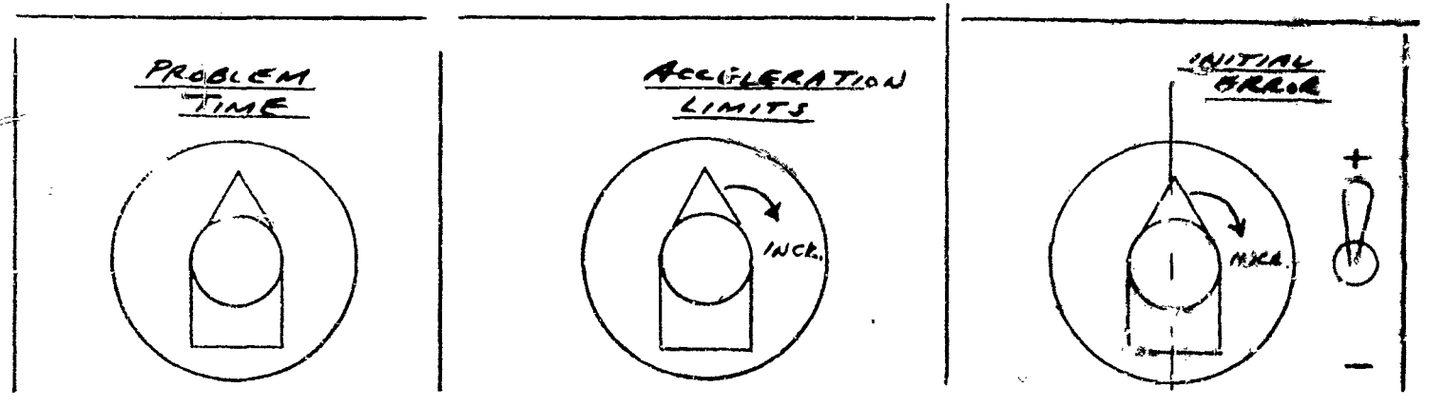
PROBLEM TIME
ACCELERATION LIMITS
INCR.
INITIAL ERROR
INCR.
+
−

FIGURE 22
CONTROL PANEL ARRANGEMENT

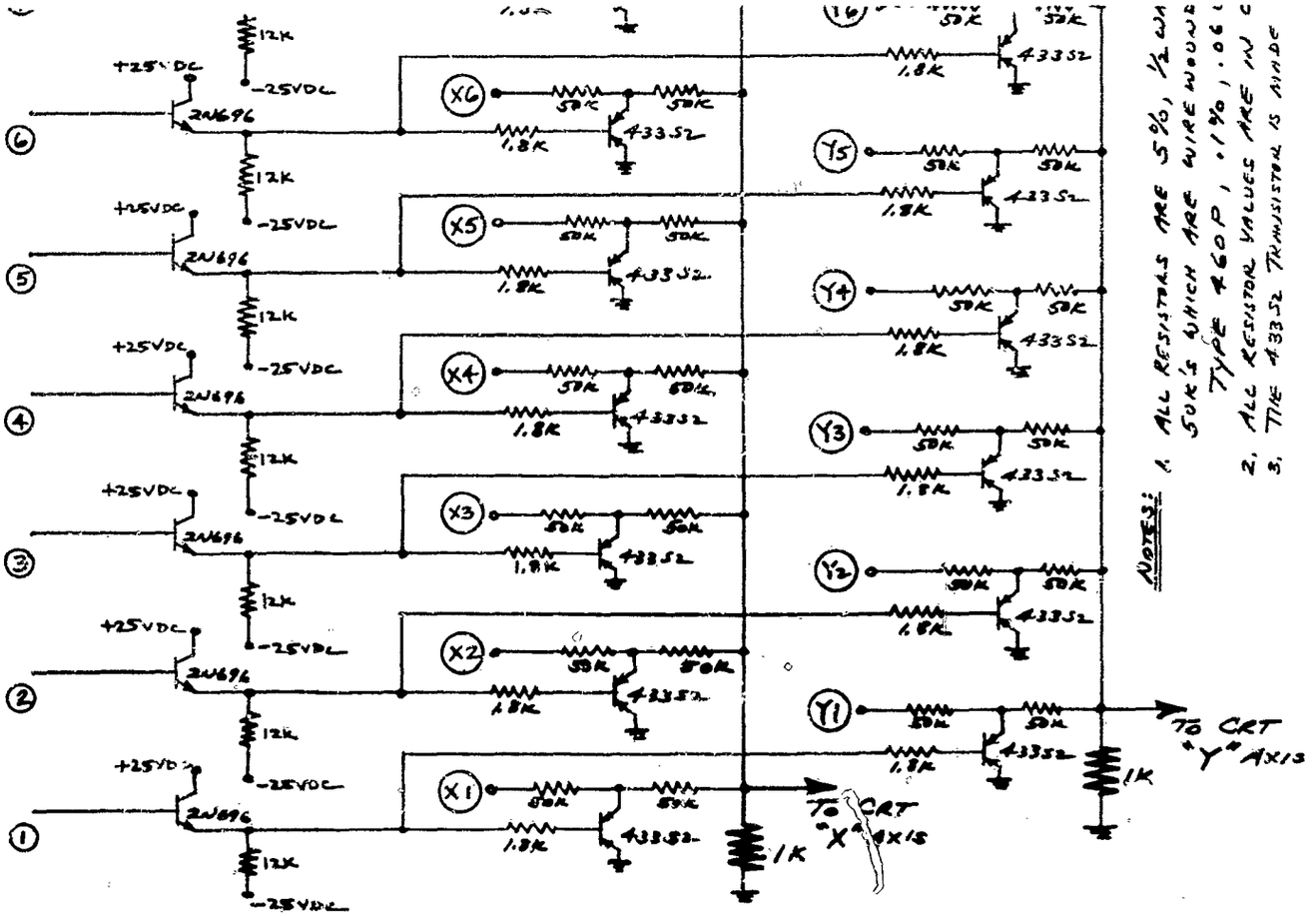

NOTES:
1. ALL RESISTORS ARE 5%, ½ WA
50K'S WHICH ARE WIREWOUN
TYPE 460P, .1%, .06
2. ALL RESISTOR VALUES ARE IN O
3. THE 4335Z TRANSISTOR IS AVAILAB

SHEET SUMMARY: 2N696'S . . 16 4335.
50K'S 64 1.8K
1K'S. 2 12K

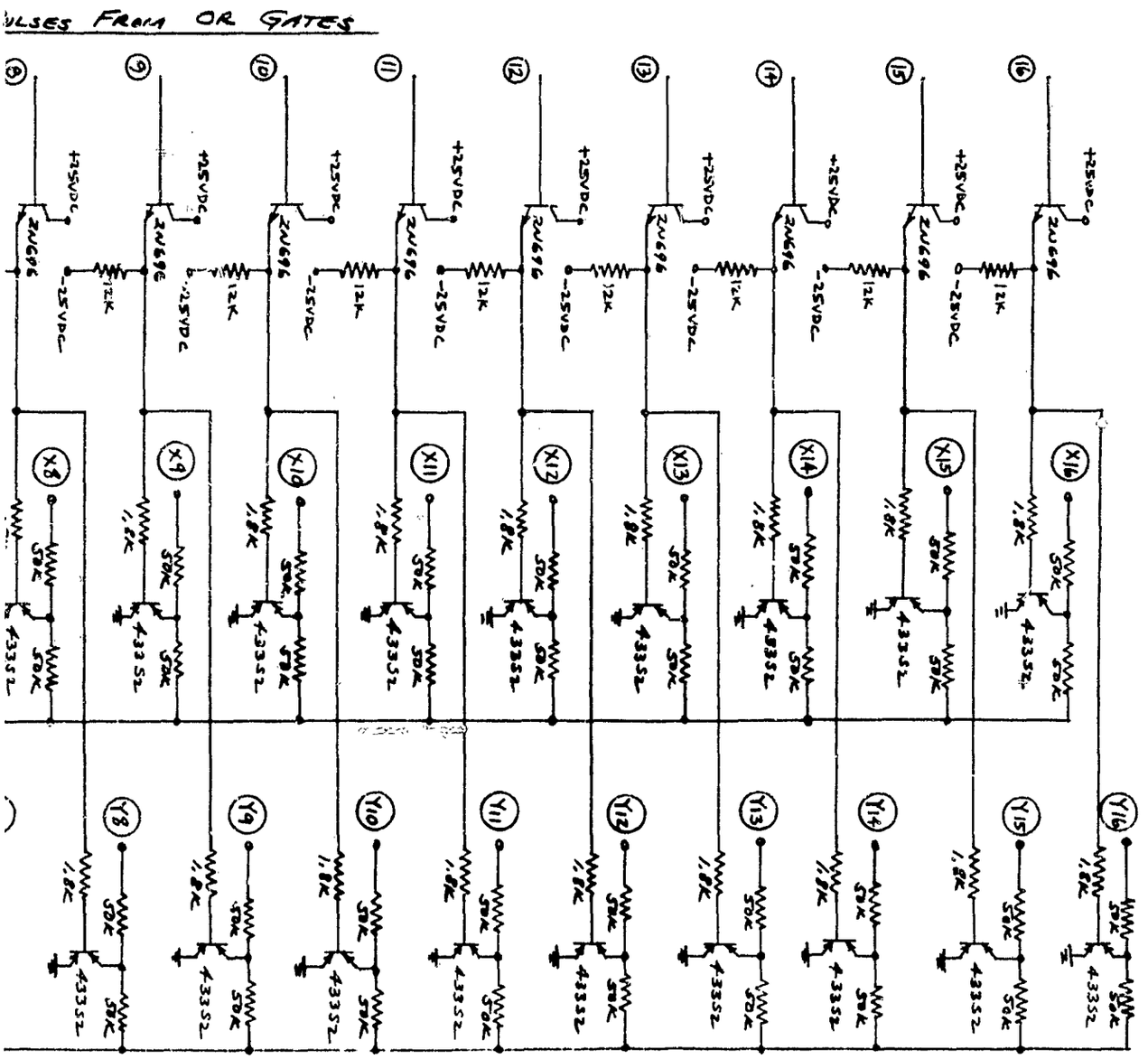

SEMICOND.

32
32
16

FIGURE 23
SWITCHES – SCHEMATIC DIAGRAM

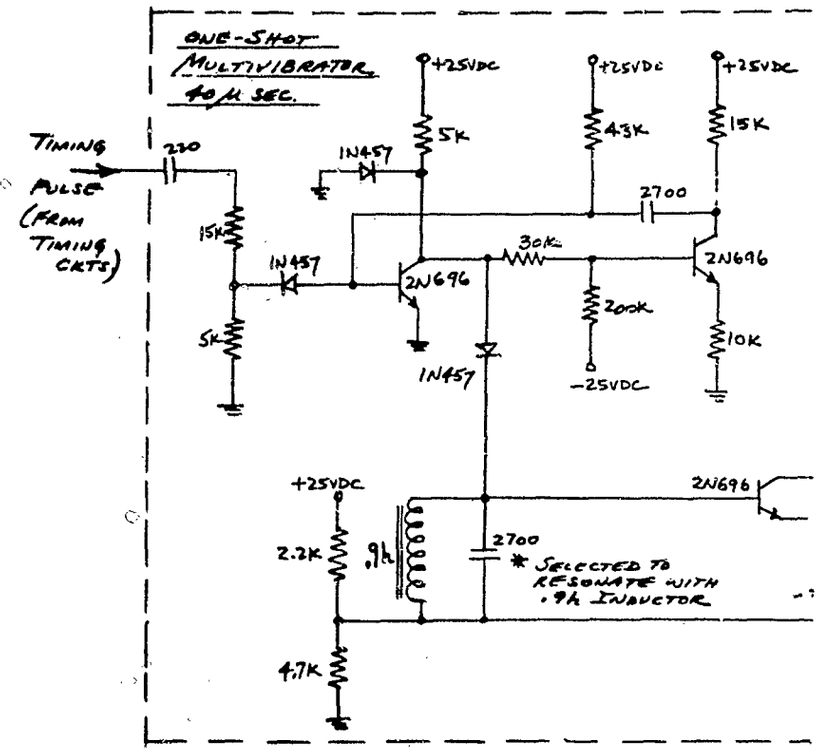

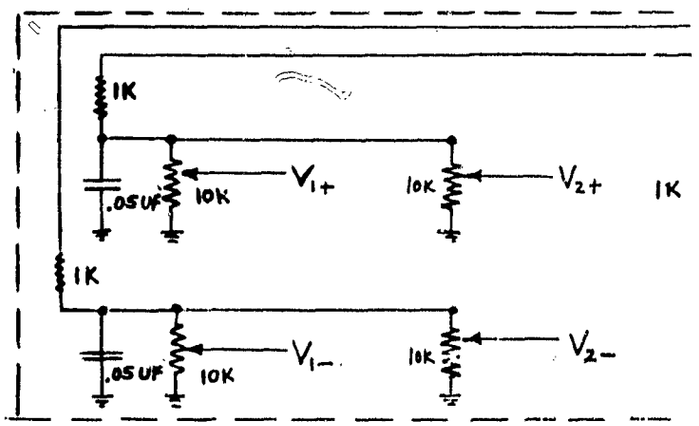

NOTES:
1. ALL RESISTORS ARE 5%, ½ WATT, C
2. ALL CAPACITORS ARE IN PICO / μ

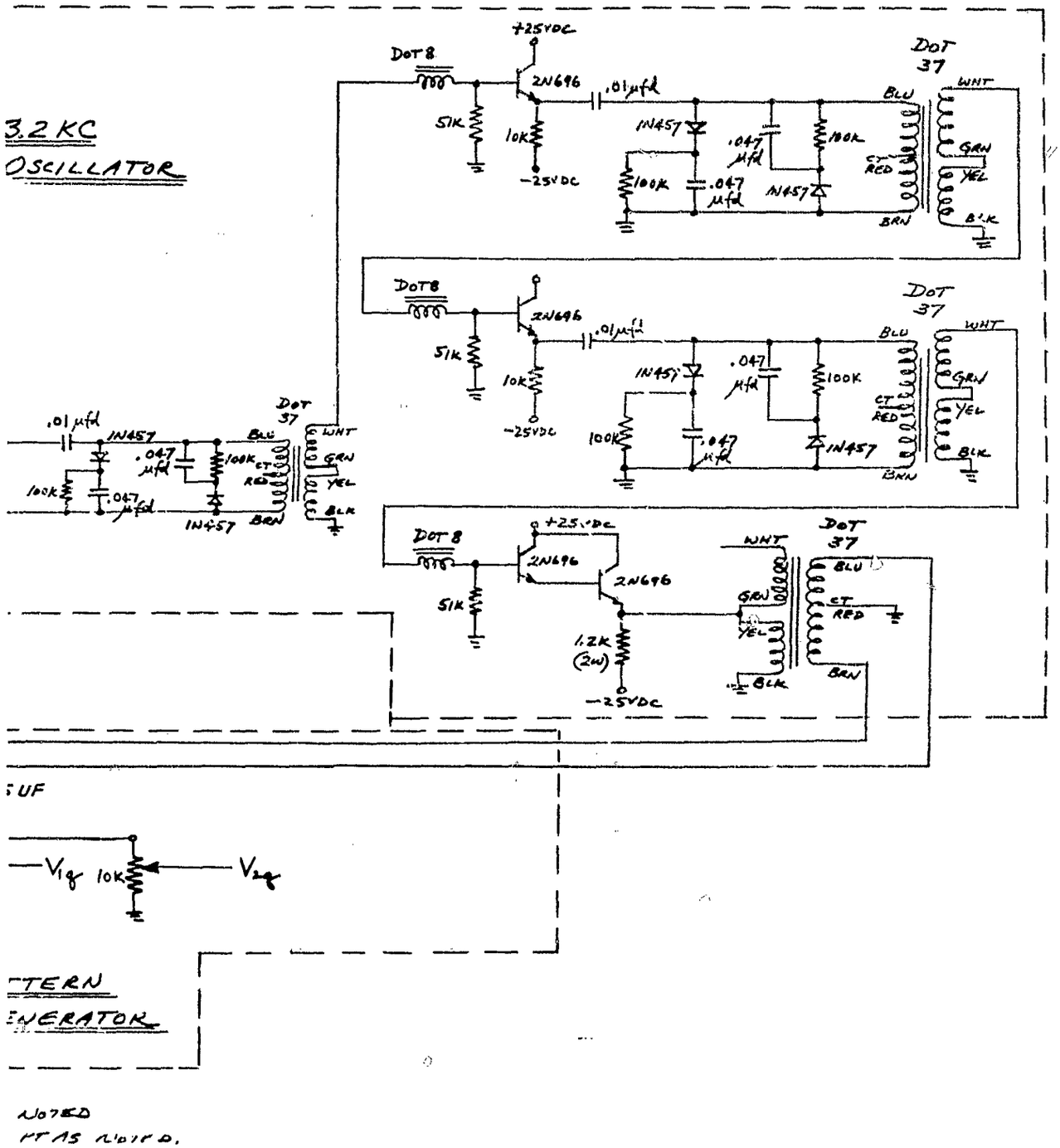

FIGURE 24

3.2 KC OSCILLATOR AND PATTERN GENERATOR–SCHEMATIC DIAGRAM

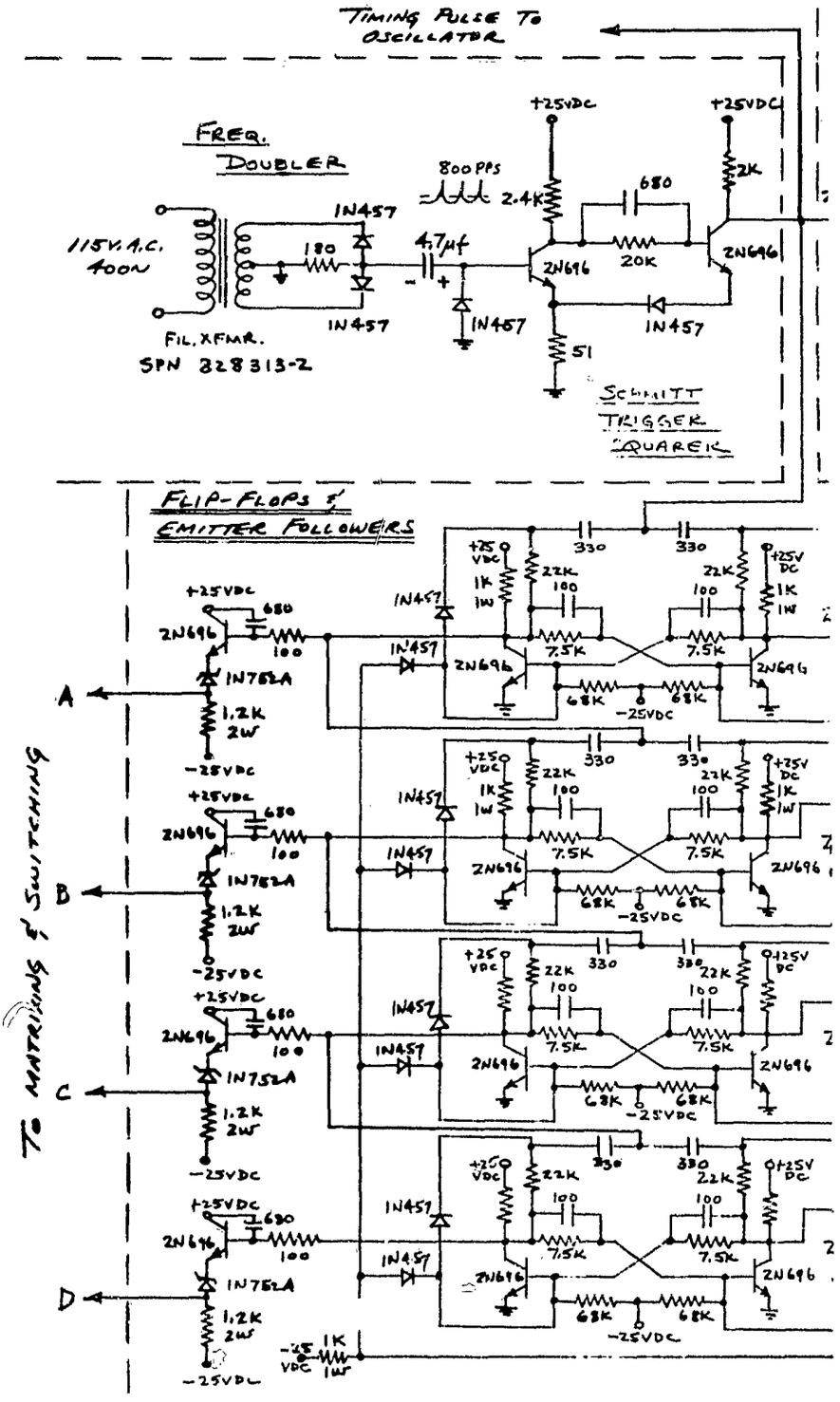
TIMING PULSE TO OSCILLATOR
FREQ. DOUBLER
115V. A.C. 400N
FIL. XFMR. SPN 828313-2
IN457
180
800 PPS
2.4K
4.7μf
2N696
20K
680
2K
+25VDC
51
SCHMITT TRIGGER SQUARER
FLIP-FLOPS & EMITTER FOLLOWERS
IN752A
1.2K 2W
-25VDC
100
7.5K
68K
330
22K
1K 1W
A
B
C
D
TO MATRIXING & SWITCHING

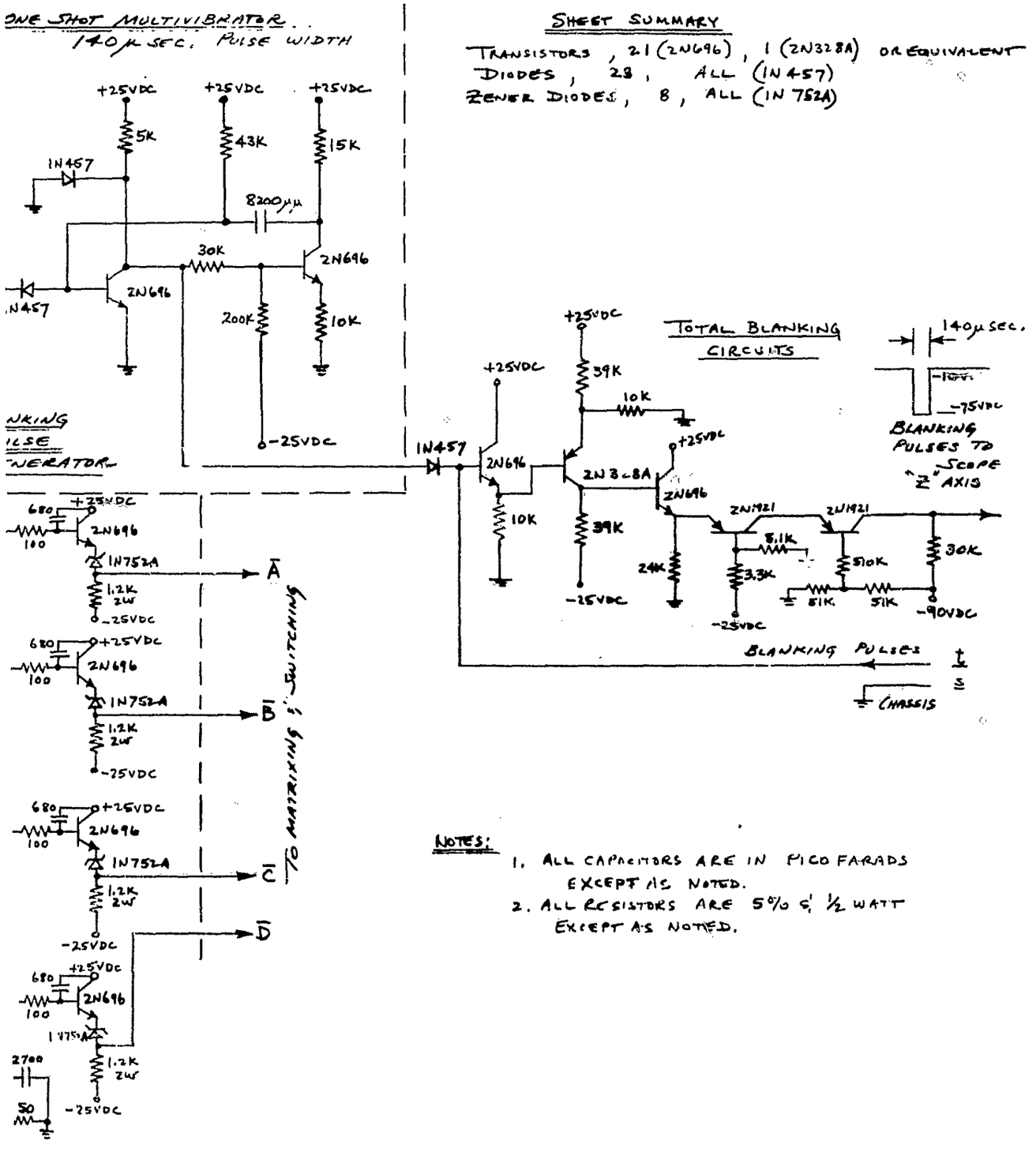

SHEET SUMMARY

TRANSISTORS, 21 (2N696), 1 (2N328A) OR EQUIVALENT
DIODES, 23, ALL (IN457)
ZENER DIODES, 8, ALL (IN752A)

NOTES:

1. ALL CAPACITORS ARE IN PICO FARADS EXCEPT AS NOTED.
2. ALL RESISTORS ARE 5% @ ½ WATT EXCEPT AS NOTED.

FIGURE 25
TIMING PULSES GENERATION – SCHEMATIC DIAGRAM

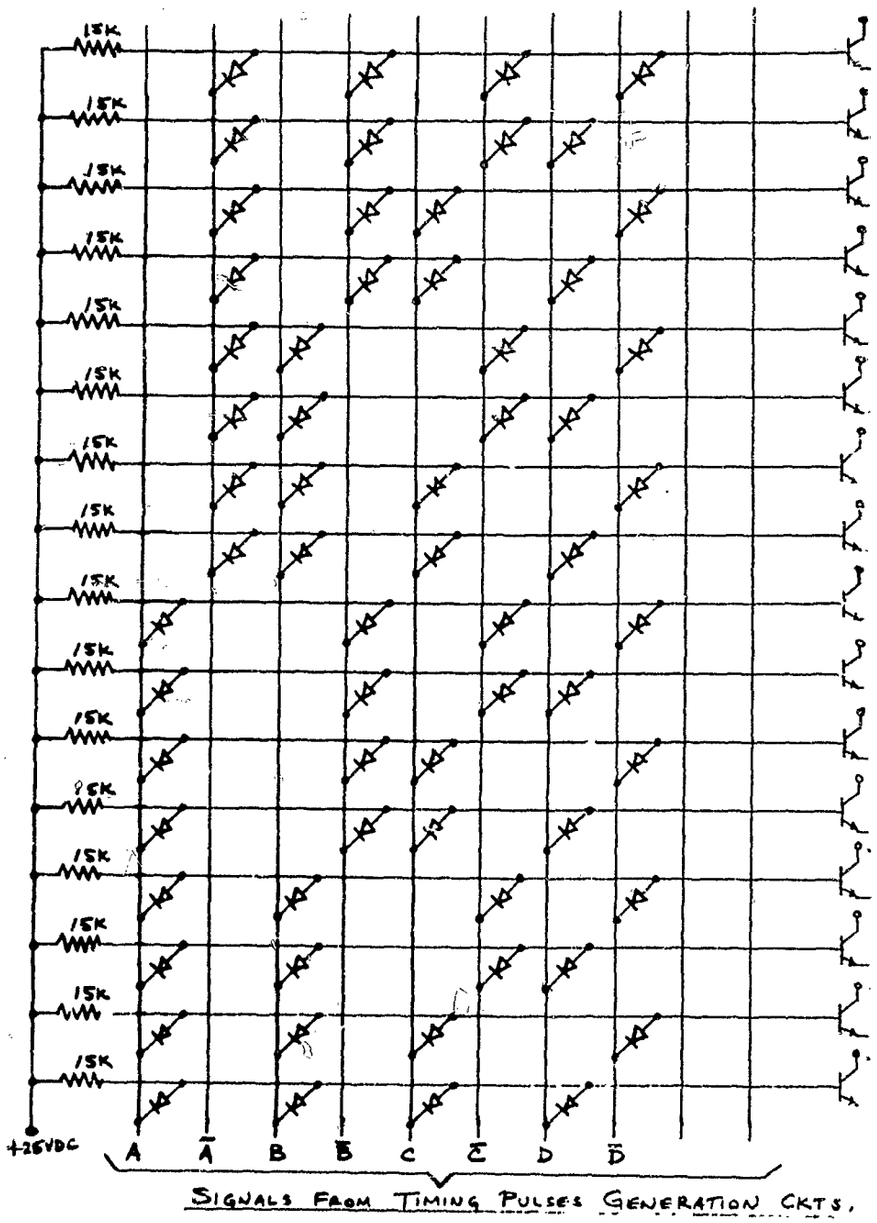

AND GATES MATRIX

NOTES: 1. ALL TRANSISTORS ARE TYPE 2N696, OR EQUIV.
2. ALL DIODES ARE TYPE IN457 OR EQUIV.

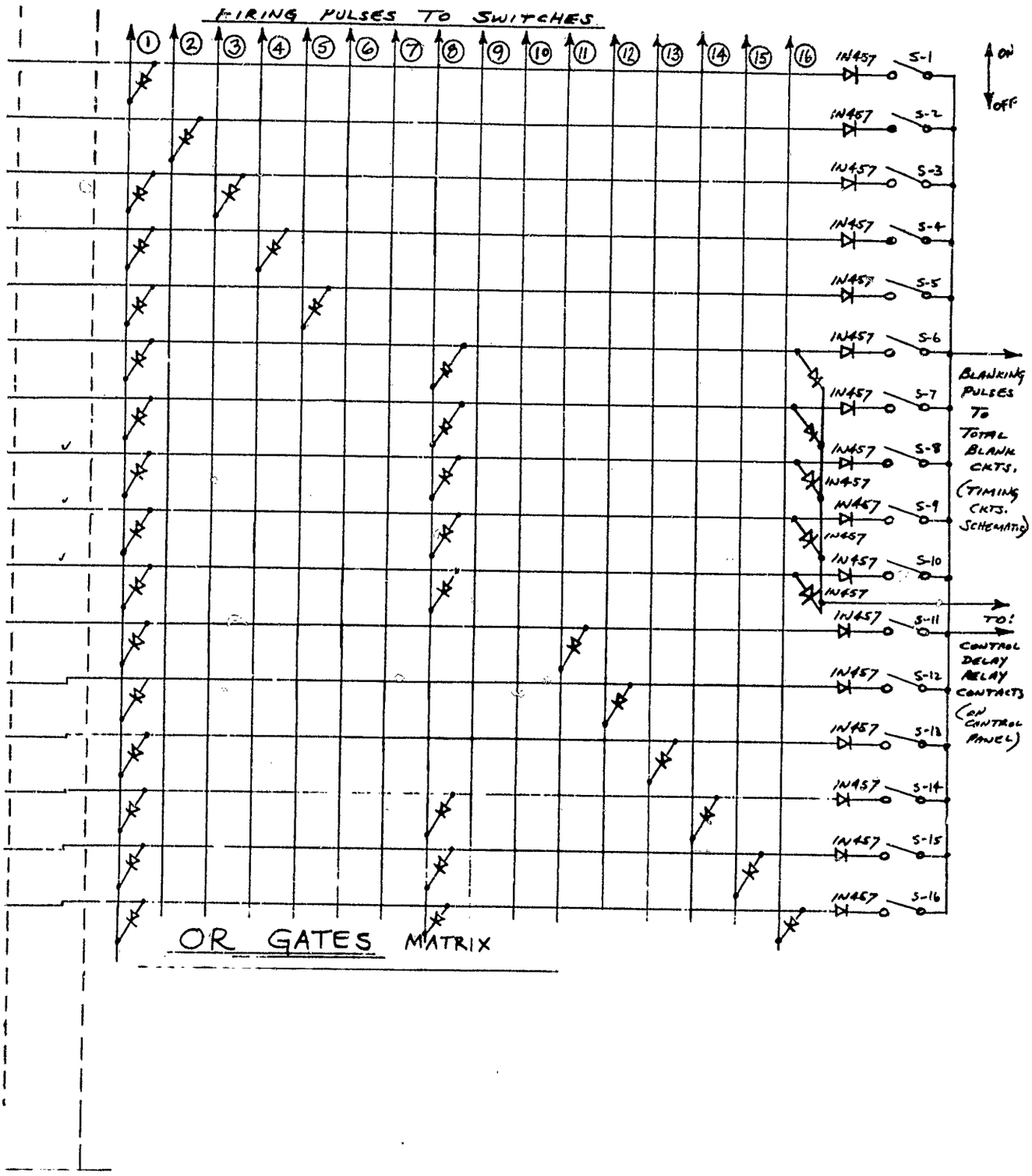

FIGURE 26
AND and OR GATES - SCHEMATIC DIAGRAM

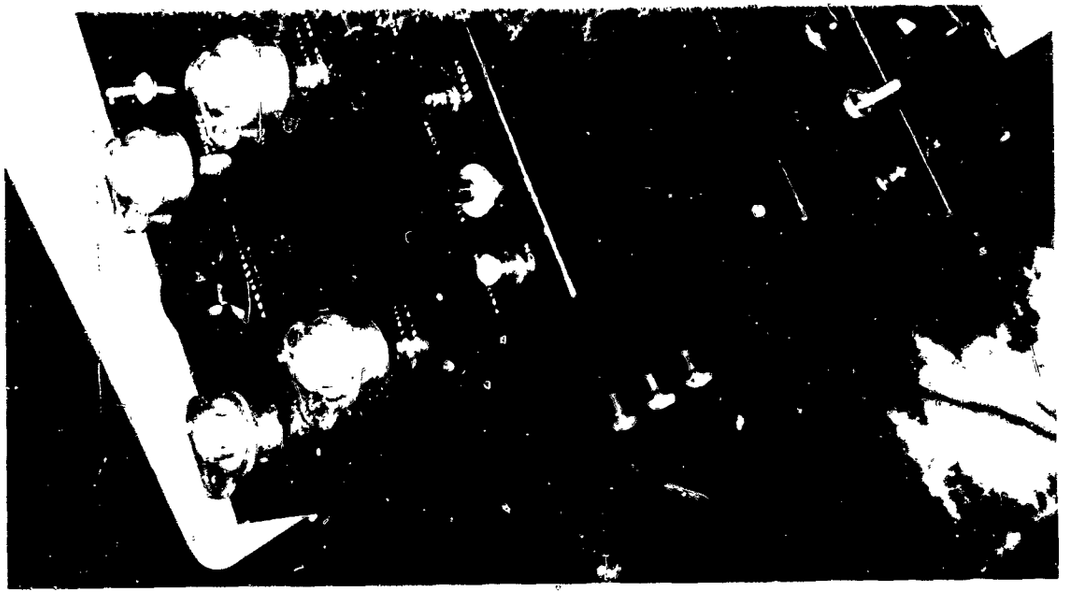

FIGURE 27. PREDICTIVE INSTRUMENTATION
OPERATOR'S STATION

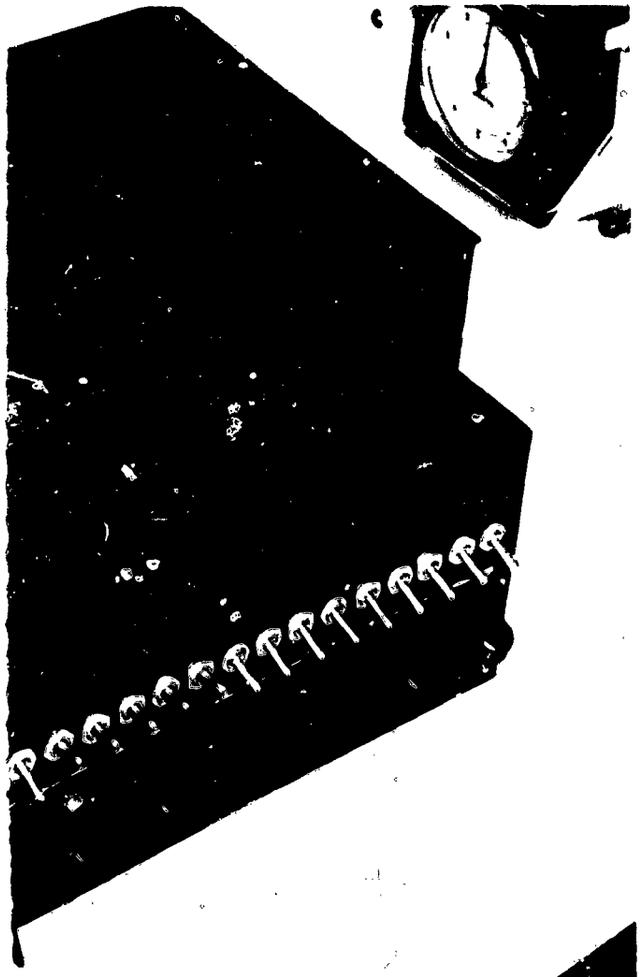

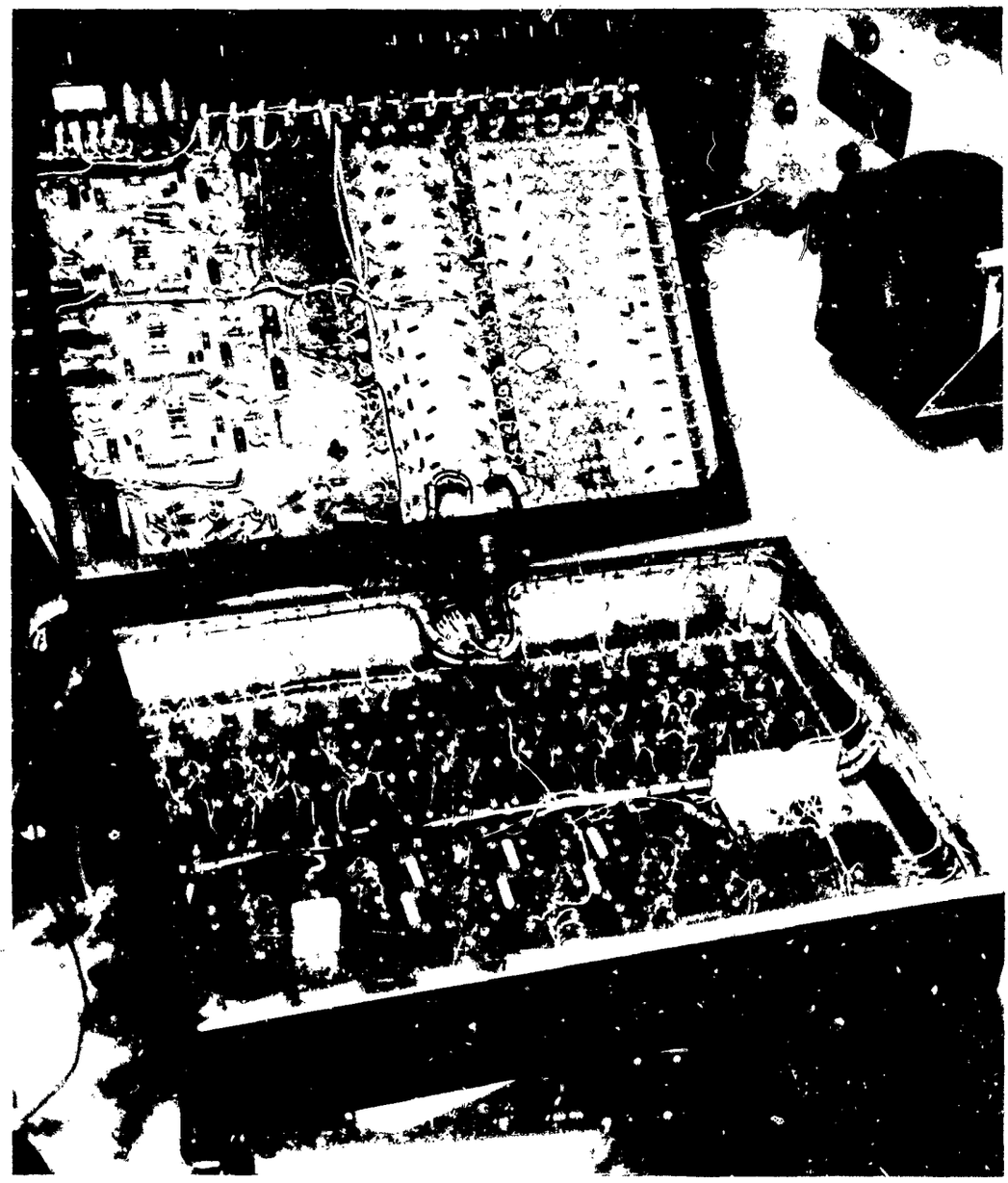

FIGURE 28. PREDICTIVE INSTRUMENTATION CONTROL UNITS

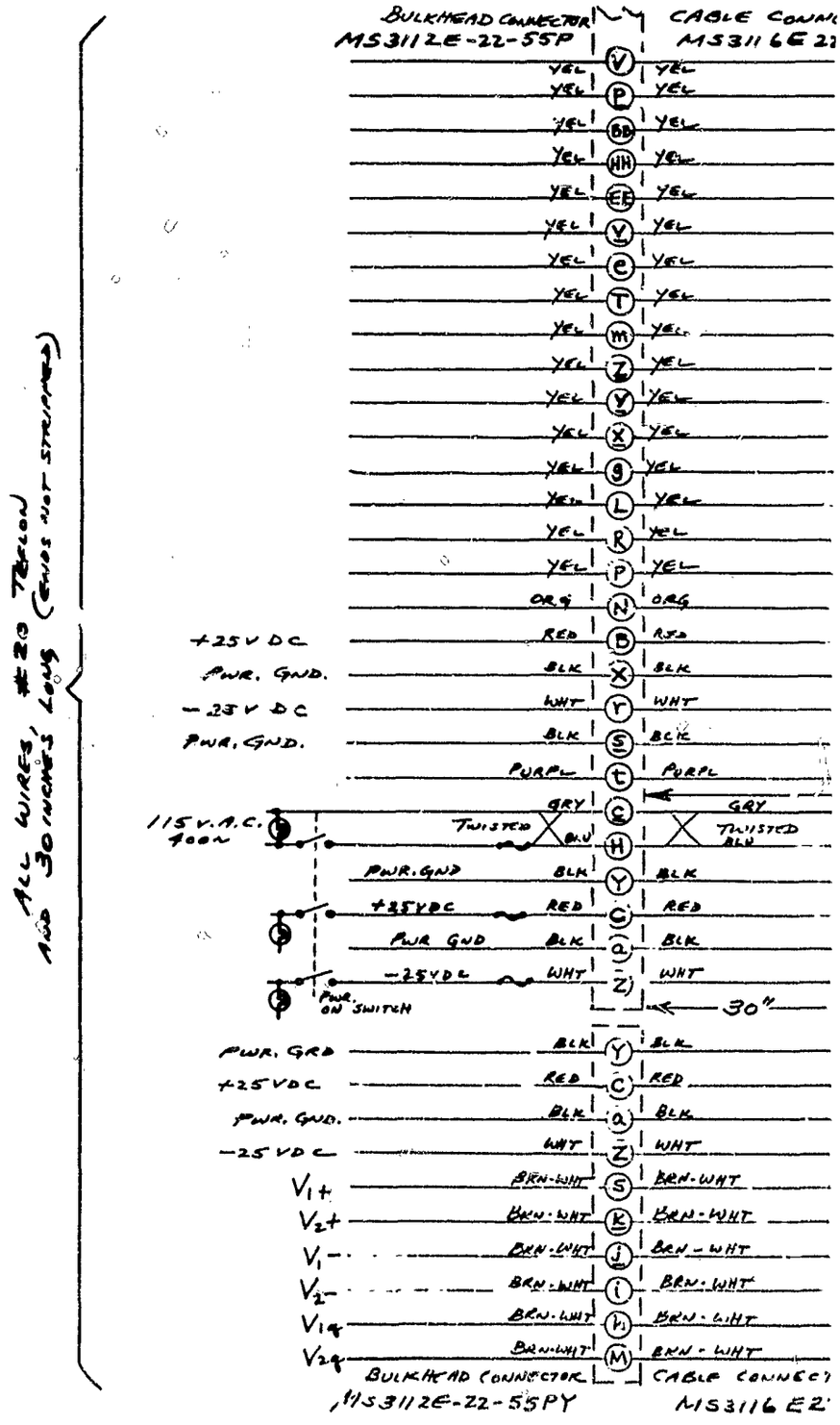

BULKHEAD CONNECTOR
MS3112E-22-55P
CABLE CONN
MS3116E 22
ALL WIRES, #20 TEFLON AND 30 INCHES LONG (ENDS NOT STRIPPED)
+25V DC
PWR. GND.
-25V DC
PWR. GND.
115 V.A.C. 400~
TWISTED
PWR. GND
+25VDC
PWR GND
-25VDC
PWR. ON SWITCH
30"
PWR. GRD
+25VDC
PWR. GND.
-25VDC
V1+
V2+
V1-
V2-
V1q
V2q
BULKHEAD CONNECTOR
MS3112E-22-55PY
CABLE CONNECT
MS3116E2

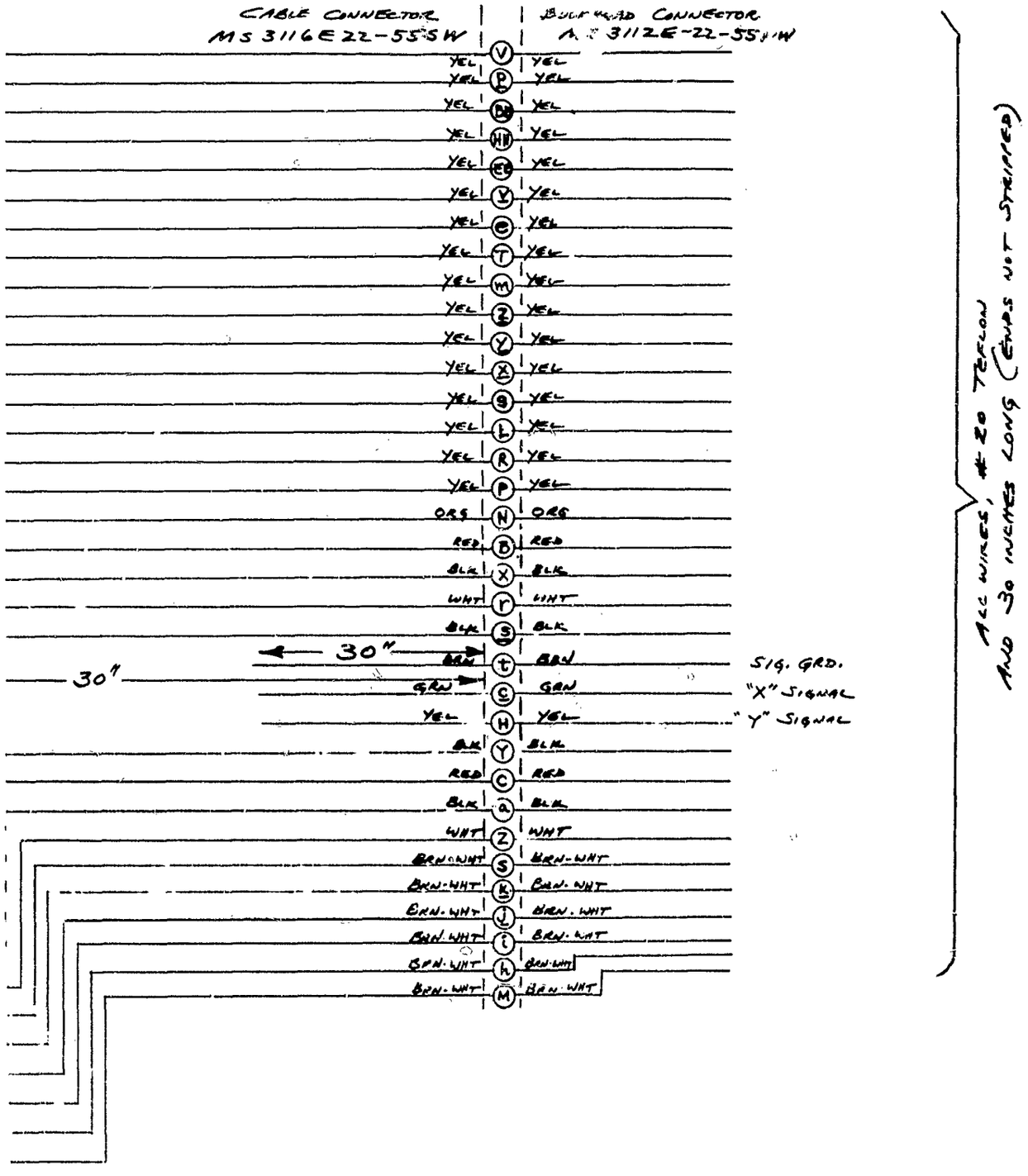

FIGURE 29
CONNECTOR AND CABLING WIRING (SHEET 1 OF 2)

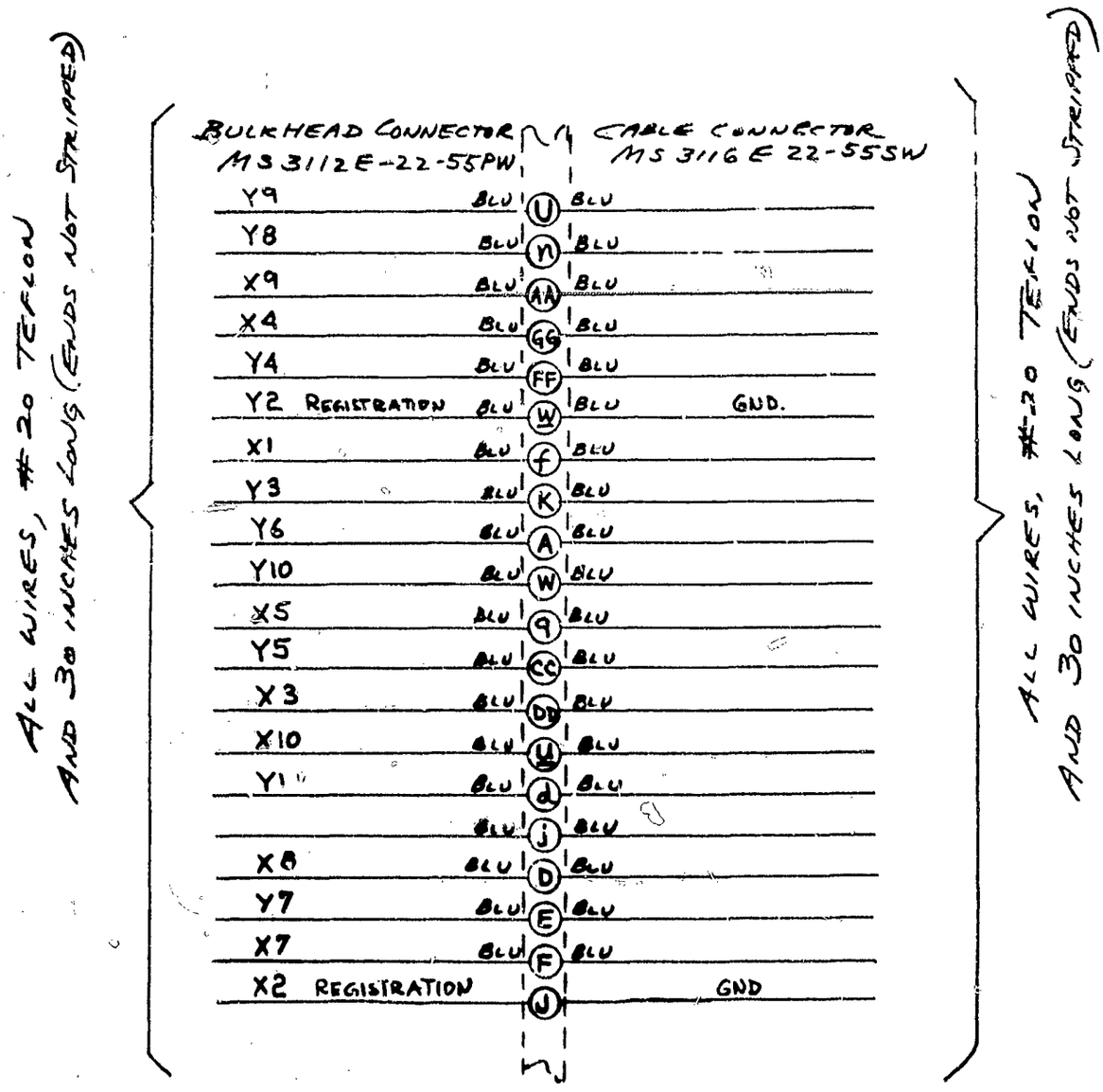

FIGURE 29. CONNECTOR AND CABLING WIRING (SHEET 2 OF 2)